Order Code	Total Length (L) ± 5mm	Insertion Length (A) with MKT1/2/3 ± 5mm (0.2 in)
SLS-L500-BM-SRV	640 mm (25 in)	210 to 340 mm (8 to 13 in)

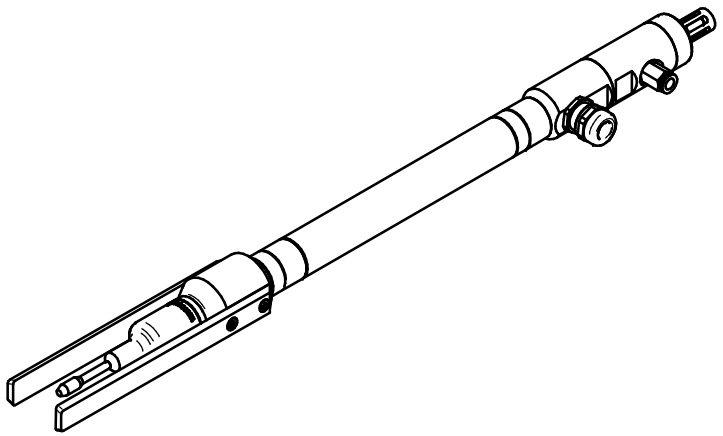

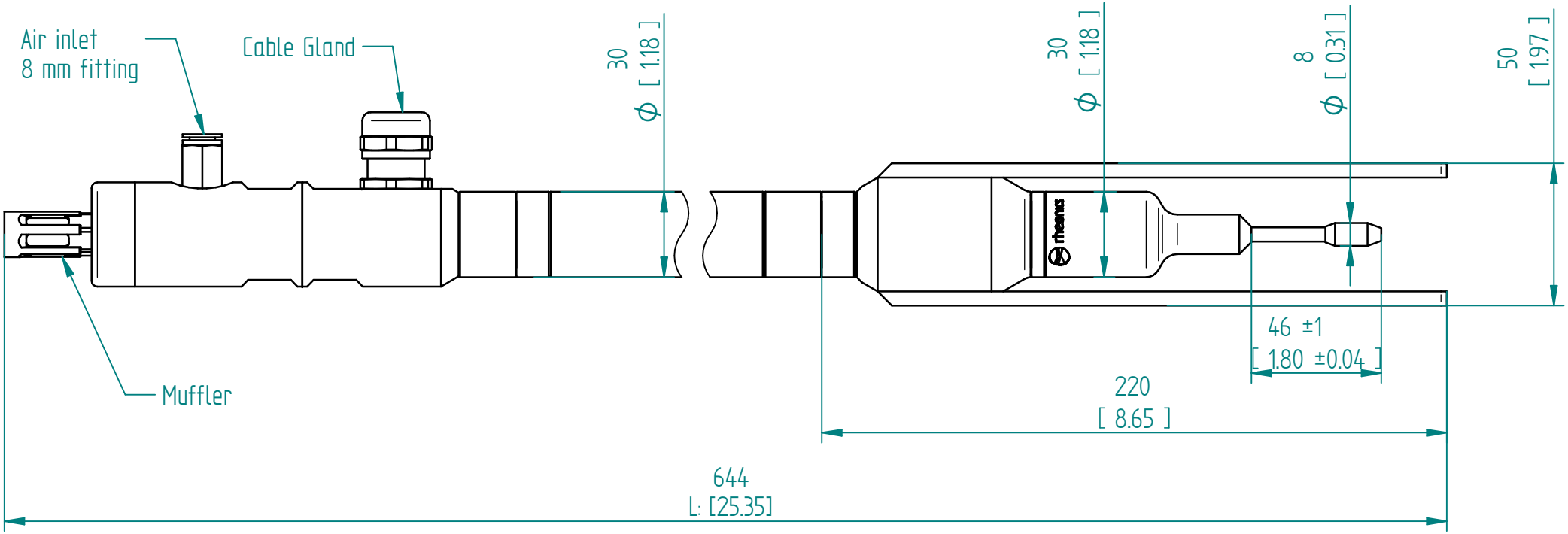

Units: mm [inch]

SLS-L500-BM-SRV

This drawing remains property of rheonics. It may be neither copied nor informed to third persons or competitors without our approval. (2 paragraph 1 fig.7 copyright act of 9th Sept. 1965)

rheonics

Protected by US and International patents granted and pending

Order Code	Total Length (L) ± 5mm	Insertion Length (A) with MKT1/2/3 ± 5mm (0.2 in)
SLS-L500-BM-SRD	640 mm (25 in)	210 to 340 mm (8 to 13 in)

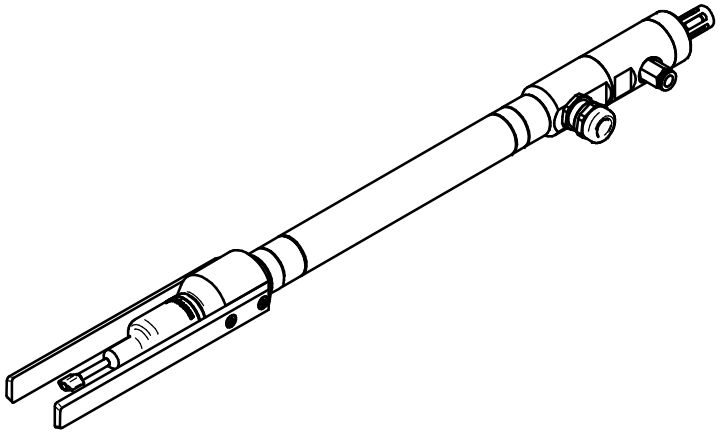

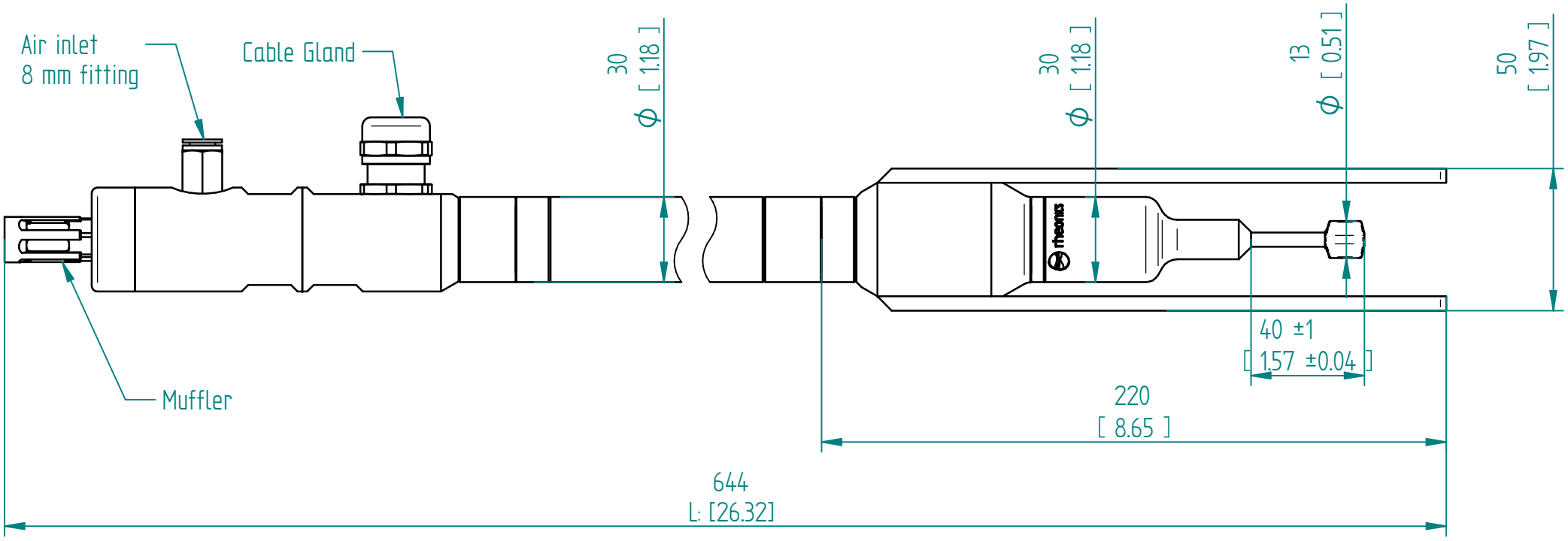

Units: mm [inch]

SLS-L500-BM-SRD

This drawing remains property of rheonics. It may be neither copied nor informed to third persons or competitors without our approval. (2 paragraph 1 fig.7 copyright act of 9th Sept. 1965)

rheonics

Protected by US and International patents granted and pending

Order Code	Total Length (L) ± 5mm	Insertion Length (A) with MKT1/2/3 ± 5mm (0.2 in)
SLS-L500-BM	640 mm (25 in)	210 to 340 mm (8 to 13 in)

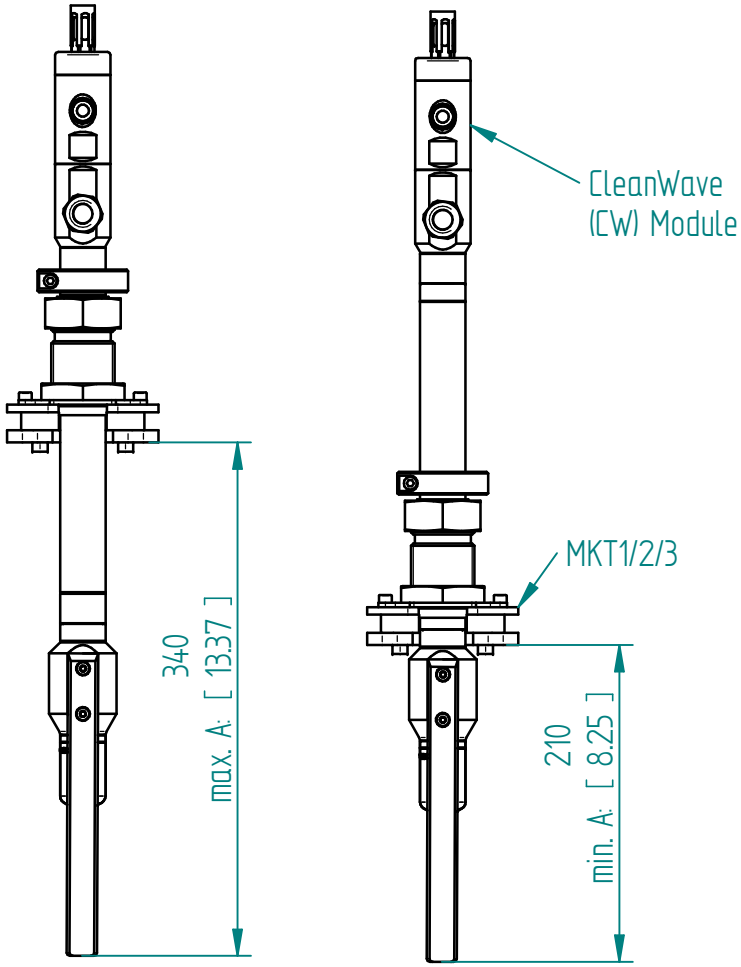

MKT1: Adjustable insertion by compression fitting

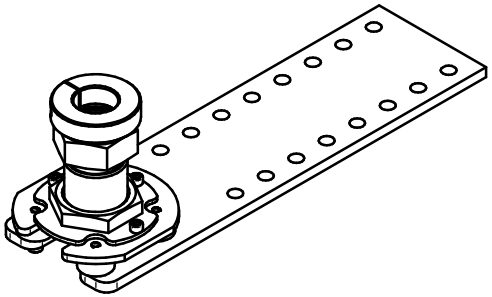

MKT2: Fixed insertion by heat-shrink ring

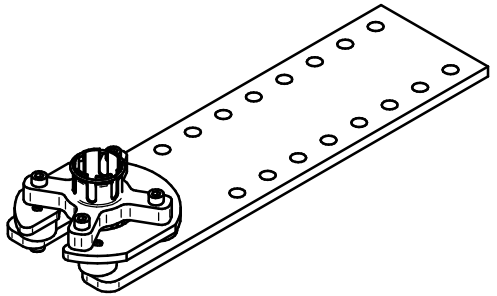

MKT3: Fixed insertion by welded flange

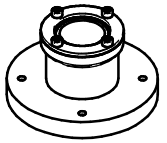

Units: mm [inch]

SLS-L500-BM Mounting

This drawing remains property of rheonics. It may be neither copied nor informed to third persons or competitors without our approval. (2 paragraph 1 fig.7 copyright act of 9th Sept. 1965)

rheonics

Protected by US and International patents granted and pending