MANUAL

DocID: SRD-G1-OP-2606
Published: 06-2026

Rheonics SRD

Inline Density and Viscosity Meter

rheonics

© RHEONICS 2026
No part of this publication may be copied or distributed, transmitted, transcribed, stored in a retrieval system, or translated into any human or computer language, in any form or by any means, electronic, mechanical, manual, or otherwise, or disclosed to third parties without the express written permission of Rheonics. The information contained in this manual is subject to change without notice.

EUROPE/GLOBAL
Rheonics GmbH
Winterthur, Switzerland
Tel: +41 52 511 32 00

USA
Rheonics, Inc.
Sugar Land, TX, USA
Tel: +1 713 955 7305

Website: https://rheonics.com
Support Portal: https://support.rheonics.com
Sales E-Mail: info@rheonics.com
Support E-Mail: support@rheonics.com

Manual conforms to IEC 82079-1:2019

SRD-G1-OP-2606	Rheonics SRD-G1 Operator Manual	

Scan QR-code to download a pdf version of this manual.

TRADEMARKS

Rheonics ® is a registered trademark of Rheonics. All other trademarks, logos, and sensor designs featured herein are trademarks and proprietary designs of Rheonics or of the third party. This technology is protected by granted patents and pending applications. Content and layout © 2024–2026 Rheonics. All rights reserved. Unauthorized reproduction or use is strictly prohibited.

Legal: rheonics.com/ip

Contents

1 Safety & Hazards **4**
1.1 General Safety Instructions . . . 4
1.2 Intended Use . . . 4
1.3 Qualified Personnel . . . 5
1.4 Safety Symbols and Signal Words . . . 5
1.5 Electrical Safety . . . 5
1.5.1 EMC Guidance . . . 5
1.6 Pressure Safety . . . 6
1.7 Temperature Safety . . . 6
1.8 Chemical Safety . . . 6
1.9 Residual Risks . . . 6
1.10 Cybersecurity . . . 6

2 Before you Begin **8**
2.1 About the manual . . . 8
2.2 Who should read this manual? . . . 8
2.3 Contact . . . 8
2.4 Nomenclature . . . 8
2.5 Symbols . . . 8
2.6 Related documentation . . . 9

3 About the SRD Inline process density meter and viscometer **10**

4 Sensor commissioning **11**
4.1 Installation and startup procedure . . . 11

5 Sensor Configuration **13**
5.1 Probe configuration by order code . . . 14
5.1.1 Material [MA] . . . 14
5.1.2 Coating [COA] . . . 15
5.1.3 Certification [CERT] . . . 15
5.1.3.1 Regulatory Conformance Certifications . . . 15
5.1.3.2 Certification: Intrinsic Safety . . . 15
5.1.3.3 Certification: 3-A and EHEDG . . . 15
5.1.4 Density range and calibration . . . 16
5.1.4.1 Density Range [DEN RAN] . . . 16
5.1.4.2 Accuracy [DEN CAL] . . . 16
5.1.5 Viscosity range and calibration . . . 17
5.1.5.1 Viscosity Range [VIS RAN] . . . 17
5.1.5.2 Accuracy [VIS CAL] . . . 17
5.1.5.3 Shear rate estimation . . . 18
5.1.6 Temperature range [T] . . . 19
5.1.7 Pressure range [P] . . . 19
5.1.8 Variants [X] . . . 20
5.1.8.1 Probe Examples . . . 20
5.1.9 Options [OPT] . . . 24
5.2 Rheonics Sensor Cable and Connection Variants . . . 25
5.2.1 Cable Construction and Common Characteristics . . . 25
5.2.2 Cable Variant Descriptions . . . 25
5.2.3 Available Cable Variants and Part Numbers . . . 25
5.3 Sensor Module Electronics Configuration . . . 26
5.3.1 Variants by order code . . . 26
5.3.2 Specifications by variant . . . 27
5.3.2.1 SME-TRD (E1) and SME-TR (E2) . . . 27
5.3.2.2 SME-TR(D) with and without display (E1/E2) . . . 27
5.3.2.3 SME-DRM (E3) . . . 28
5.3.2.4 SME-BOX (E4) . . . 28

©Rheonics

5.3.3 Environmental and EMC Specifications . . . 30
5.3.3.1 Operating Environment . . . 30
5.3.3.2 EMC Compliance . . . 30
5.4 Sensor Configuration Code Overview . . . 30

6 Technology and design **33**
6.1 Operating principle . . . 33
6.2 Probe main parts . . . 34
6.2.1 Sensing Element . . . 34
6.2.2 Process Connection . . . 34
6.2.3 Probe body . . . 34
6.2.4 Electrical Connection . . . 35
6.3 Sensor Probe Markings . . . 36

7 Measurements **37**
7.1 Core Measurement Definitions . . . 37
7.1.1 Viscosity . . . 37
7.1.2 Density . . . 38
7.1.3 Temperature . . . 39
7.2 Derived Fluid Properties . . . 39
7.2.1 Temperature-Compensated Viscosity . . . 39
7.2.2 Temperature-Compensated Density . . . 40
7.2.3 Concentration Models . . . 41
7.3 Worked Examples . . . 42
7.3.1 Example — Density Temperature Compensation . . . 42
7.4 Cup-Second Conversion . . . 44
7.5 Accessing Measurement Parameters . . . 44
7.5.1 Rheonics Control Panel (RCP) . . . 44
7.5.2 SME Display (option E1) . . . 44
7.5.3 Fieldbus and Analog Outputs . . . 44

8 Installation **45**
8.1 Installation Requirement . . . 45
8.2 Installation: Flow-Orientation . . . 45
8.3 Additional installation notes . . . 47
8.4 Hygienic installation . . . 48
8.4.1 Hygienic installation for 3-A and EHEDG . . . 48
8.4.2 HAW-12G-OTK . . . 51
8.5 High-Temperature Installations . . . 51
8.6 Corrosive and Erosive Fluid Installations . . . 53
8.6.1 Deposits, particles and fibres . . . 54
8.7 High-Pressure Installations . . . 54
8.8 Fluid Forces on the Sensing Element . . . 55
8.8.1 Force Limits: High Velocity and High Viscosity . . . 56
8.8.2 Recommended Installation: Parallel Orientation . . . 56
8.9 Ultra-High-Viscosity & Flow Protection Installations . . . 57

9 Sensor Accessories **59**
9.1 Weldolets . . . 59
9.2 Flow Cells . . . 62
9.3 Thermal Chambers . . . 66
9.4 Table Top . . . 67
9.5 Mounting . . . 68
9.6 Tank or long insertion mounting . . . 68
9.7 Self Cleaning Accessories . . . 69
9.8 Retractable System . . . 70
9.9 Electronics Accessories . . . 70

10 Sensor Electronics (SME) Markings **71**

11 Sensor Wiring **73**
11.1 Wiring: Variant A . . . 73
11.2 Wiring: Variant B . . . 73
11.3 Wiring: Variant C . . . 74
11.4 Wiring: Variant D . . . 74
11.5 Grounding of SME-TR/SME-TRD . . . 74
11.6 Wiring examples . . . 75
11.7 Connecting and disconnecting wires to the terminal blocks on SME . . . 76
11.8 Grounding and Earthing Recommendations for Rheonics Sensor Installations . . . 77
11.9 Powering the SME . . . 77

12 Sensor Electronics Status LED **79**
12.1 SME Status LED . . . 79
12.2 SME-TRD Display Status LED . . . 79
12.2.1 SME-TRD warning and errors . . . 81

13 Maintenance **82**
13.1 Calibration/Scaling . . . 82
13.2 Calibration fluids . . . 82
13.3 Calibration/Scaling in climate chambers . . . 83
13.4 Density-Scaling and Offset Correction . . . 84
13.5 Cleaning . . . 85
13.6 Cleaning, sensor electronics . . . 85
13.7 Repair . . . 85
13.8 Storage . . . 85

14 Communication Protocols **86**
14.1 4–20 mA (C1) . . . 86
14.1.1 Wiring diagram for SME and 4–20 mA . . . 86
14.1.2 Electrical parameters . . . 86
14.1.3 Is the Rheonics SME a passive or active device? . . . 87
14.1.4 Configuring the Output Range . . . 88
14.2 Modbus RTU (C2) . . . 89
14.3 Serial USB (C3) . . . 89
14.4 Bluetooth (C5) . . . 89
14.5 Modbus TCP (C6) . . . 90
14.6 EtherNet/IP (C7) . . . 90
14.7 HART (C8) . . . 90
14.8 PROFINET (C9) . . . 90
14.9 WirelessHART (C10) . . . 90
14.10 RCP software . . . 90
14.11 IO-Link, CC-Link, and future protocols . . . 91

15 Rheonics Software **92**
15.1 Rheonics Control Panel . . . 92
15.2 Application and Solution-Specific Software . . . 93

16 Common Troubleshooting Issues and Solutions **94**

17 Index **96**
17.1 Tables Index . . . 96
17.2 Figures Index . . . 96

18 Notes/Errata **99**

19 Revision and Approvals **100**

1 Safety & Hazards

1.1 General Safety Instructions

This chapter contains safety information that must be observed at all stages of the product lifecycle: receiving, storage, installation, commissioning, operation, maintenance, and decommissioning. Read this chapter in its entirety before working with the Rheonics Sensors. Failure to observe the safety instructions in this manual may result in unsafe conditions leading to personal injury, property damage, or damage to the instrument. Rheonics accepts no liability for damage caused by non-observance of these instructions.

NOTICE

If the device is used not according to Rheonics' specifications, the device-specific protection ratings may be impaired. It is recommended to connect the sensor electronics) Type:SME or SME-TR(D)= to the SRD Sensor probe (Type SR) with a UL approved cable style suitable for external interconnection and outdoor use, equipped with an M12, 8 pin, A Coded terminal.

CAUTION

SR-Sensor probe exceeding 18kg requires special handling and potentially additional support due to its significant weight, which could exceed the typical handling capabilities of standard equipment and personnel.

1.2 Intended Use

The Rheonics sensor is designed exclusively for inline measurement of the density, viscosity and temperature of liquids in industrial process environments. The sensor operates by means of a balanced torsional resonator immersed in the process fluid.

Intended applications:

- Inline viscosity measurement in pipes, tanks, vessels, reactors, and mixing equipment
- Integration with process control systems via supported communication protocols (4–20 mA, Modbus, HART, EtherNet/IP, PROFINET, and others)
- Laboratory and offline viscosity measurement
- Use in hygienic processes when equipped with 3-A or EHEDG certified probe variants and installed.
- Use in hazardous (explosive) atmospheres when equipped with ATEX/IECEx certified variants and installed per the separate EX Intrinsically Safe Installation manual

NOTICE

The SRD must only be used for its intended purpose. Any use beyond the intended purpose, including modification of the sensor probe or electronics without authorization from Rheonics, is considered improper use. Rheonics accepts no liability for damage resulting from improper use.

The following does NOT constitute intended use:

- Use as a safety-critical (SIL-rated) device unless explicitly certified
- Measurement of gases or dry powders
- Immersion in fluids exceeding the rated temperature, pressure, or chemical compatibility
- Use in explosive atmospheres without the appropriate EX-certified variant
- Mechanical modification of the sensing element, probe body, or process connection
- Use of non-Rheonics electronics or sensor cables with a Rheonics sensor probe

1.3 Qualified Personnel

Installation, commissioning, operation, and maintenance of the SRD must be performed only by qualified personnel who:

- Have appropriate technical training for the specific task (mechanical, electrical, or software)
- Are familiar with applicable safety regulations, electrical codes, pressure equipment regulations, and hazardous area requirements
- Have read and understood this operator manual and all related documentation
- Are authorized by the plant owner or operator to perform the work

⚠ WARNING

For hazardous area installations, only personnel trained in explosion protection and certified for the applicable zone classification may install, connect, or maintain the EX-rated SRD. Refer to the EX manual shipped with the EX variant of the sensor.

1.4 Safety Symbols and Signal Words

This manual uses signal words per ANSI Z535.6 and ISO 7010:

Signal Word	Meaning
DANGER	Hazardous situation that, if not avoided, will result in death or serious injury.
WARNING	Hazardous situation that, if not avoided, could result in death or serious injury.
CAUTION	Hazardous situation that, if not avoided, could result in minor or moderate injury.
NOTICE	Important information not related to personal injury. Used for property damage prevention.

Table 1: Signal Words

1.5 Electrical Safety

The Sensor electronics (SME) requires a regulated 24 V DC supply (18-36 V DC range). Use only supplies compliant with applicable safety standards (UL, CE). Minimum rating: 10 W, $\geq$ 400 mA.

⚠ NOTICE

Disconnect all power before making electrical connections. Failure to do so may result in electric shock or damage to the Sensor electronics.

⚠ NOTICE

Ground loops can cause excessive currents on the SME ground wire, potentially causing permanent damage. Use a dedicated 24 V DC supply with galvanic isolation. Do not share the supply ground with other instruments unless galvanic isolation is confirmed.

1.5.1 EMC Guidance

- Use shielded cables for all signal connections
- Maintain $\geq$ 200mm separation from high-power cables or VFDs
- Do not install the SME adjacent to high-power contactors or radio transmitters

©Rheonics

1.6 Pressure Safety

Do not remove the sensor probe while the system is under pressure. Ensure all applicable safety procedures for your process are followed before installation or removal, including depressurization, isolation, and any required lockout/tagout (LOTO) practices.
During operation, damaging the sensor probe must be avoided. Especially damages on the sensing element must be avoided as they can reduce the pressure rating.

CAUTION

The SRD is not suited for corrosive or abrasive environments under pressure.

1.7 Temperature Safety

The maximum temperature on data sheet applies for the sensor probe. Exceeding it, even briefly, may cause permanent damage to the sensor probe.

- The temperature rating does not cover the sensor cable nor the sensor cable connection. Select a cable variant rated for the ambient and process temperature at the connection point.
- For the sensor electronics, the maximum ambient temperature is $65\,^{\circ}\mathrm{C}$ $(150\,^{\circ}\mathrm{F})$.

CAUTION

For process temperatures above $60^{o}C$ the process temperature, the probe body and adjacent piping can cause severe burns. Use heat-resistant gloves when handling probes exposed to high-temperature processes.

1.8 Chemical Safety

- Verify chemical compatibility of all wetted materials (SS 316L, Hastelloy C22, other available materials) with the process fluid and cleaning agents.
- Corrosion will affect the sensor operation and pressure rating. Corrosion must be avoided
- PTFE coating [TF] is not pinhole-free and does not provide chemical protection

CAUTION

The SRD is exposed to process fluids that may be toxic, corrosive, or flammable. Always consult the Safety Data Sheet (SDS) before installation, maintenance, or removal. Wear appropriate PPE.

1.9 Residual Risks

Even with correct installation and operation, the following residual risks remain and must be assessed as part of overall plant safety:

- Thermal burns from contact with hot probe surfaces
- Fluid release due to seal degradation or gasket aging
- Electrical shock from 110/220 V AC supply to the SME-BOX (E4)
- Exposure to hazardous fluids during probe removal or cleaning
- Incorrect process control decisions due to contaminated sensor readings — use the Clean Sensor Status feature and regular air checks

1.10 Cybersecurity

- Change the default password on the SME-BOX (E4) after commissioning
- Restrict network access to the SME Ethernet port using firewalls or segmentation

- Disable Bluetooth when not in use
- Keep SME firmware current via Rheonics software
- Do not connect the SME directly to the public internet

©Rheonics

2 Before you Begin

2.1 About the manual

The SRD manual (SRD-G1-OP-2606) covers the specifications, installation and operation of the SRD Rheonics inline density and viscosity meter. Complementary information can be found in related documentation listed in Section 2.6.

2.2 Who should read this manual?

This manual is written for engineers, technicians, and people who are familiar with process instrumentation use and installation, as well as with basic mechanical and electrical knowledge.

2.3 Contact

Contact the Rheonics team for any inquiry.

For pre-sales and order-related questions contact Sales Team at info@rheonics.com
For after-sales and troubleshooting contact Support Team at support@rheonics.com

2.4 Nomenclature

Abbreviation	Full-term	Description
SME	Sensor Module Electronics	Sensor electronics
SRV	Symmetric Resonator Viscometer	Process Viscosity Sensor
SRD	Symmetric Resonator Densitometer	Process Density and Viscosity Sensor
RCP	Rheonics Control Panel	Software for data acquisition and configuration

Table 2: Nomenclature and abbreviations

2.5 Symbols


Information


Warning / Attention / Caution



3-A Symbol


Ex ATEX Symbol



UL Symbol


Do not dispose of in household waste


CE-Symbol



EHEDG Symbol



IECEx Symbol

2.6 Related documentation

The latest version manual can be accessed online under: https://rheonics.com/docid

The resource files are listed in the table below, along with their descriptions and download links. You can also access the manuals by searching the DocID provided in the table:

DocID	Description	URL
SRV-G1-OP	SRV Operator manual G1	https://rheonics.com/docid/srv-g1-op
SRD-G1-OP	SRD Operator manual G1	https://rheonics.com/docid/srd-g1-op
SW-RCP-UM	RCP User Manual	https://rheonics.com/docid/sw-rcp-um
COM-MRTU-OM	Modbus RTU Operator manual	https://rheonics.com/docid/mrtu-op
COM-MTCP-OM	Modbus TCP Operator manual	https://rheonics.com/docid/mtcp-op
COM-ENIP-OM	Ethernet/IP Operator manual	https://rheonics.com/docid/enip-op
COM-HART-OM	HART Operator manual	https://rheonics.com/docid/hart-op
COM-PNET-OM	Profinet Operator manual	https://rheonics.com/docid/pnet-op
COM-IOL-OM	IO-Link Operator manual	https://rheonics.com/docid/iol-op

Table 3: Rheonics Documentation Reference

3 About the SRD Inline process density meter and viscometer

SRD is Rheonics' inline process sensor for simultaneous density, viscosity and temperature measurement of a fluid. SRD is based on a Balanced Torsional Resonator (BTR technology), which is the trademark for the patented technology underlying the sensor.

Rheonics SRD operates with Newtonian and non-Newtonian fluids. In the sensor electronics, additional outputs can be configured such as fluid's temperature-compensated viscosity, specific gravity, fluid's concentration, solid percentage, etc. Rheonics SRD sensor is composed of three main parts, as shown in figure 1, the sensor electronics (SME), sensor cable, and sensor probe.

Figure 1: SRD Sensor Unit

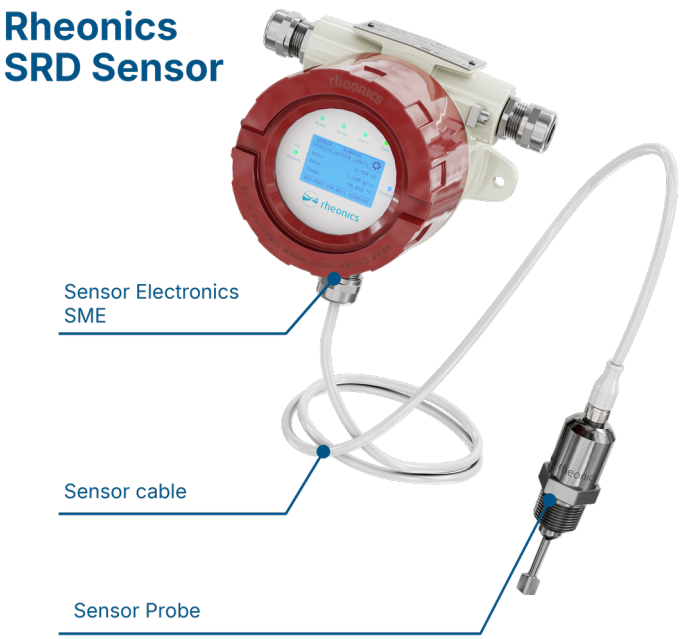

The SRD sensor probe utilizes a compact and lightweight modular architecture designed for high endurance in harsh industrial environments. Its hermetically sealed, zero-moving-part construction means no maintenance schedules, no drift, and no downtime interruptions throughout its service life.
The probe is fully compatible with cleaning in place (CIP) procedures, making it a natural fit for hygienic or process-critical environments. Rated to IP69K (subject to the connected cable type), it withstands high-pressure washdowns and harsh exposure.
A significant advantage of the Rheonics modular design is the ability to achieve reproducible measurements across diverse probe variants. This ensures consistent data acquisition regardless of differences in probe geometry, process connections, or insertion lengths.

Visit Rheonics SRD articles [1] to learn about SRD probe variants.
Review SRD operating principle whitepaper[2] or Section 6.1 of this manual for more information on the sensor operation.

[1] https://rheonics.com/support/srd
[2] https://rheonics.com/whitepapers/

4 Sensor commissioning

This section provides a step-by-step workflow to correctly commission the Rheonics SME (see section 5.3) together with the SRD, using the sensor cable and the RCP Rheonics software.

Figure 2: Commissioning setup example

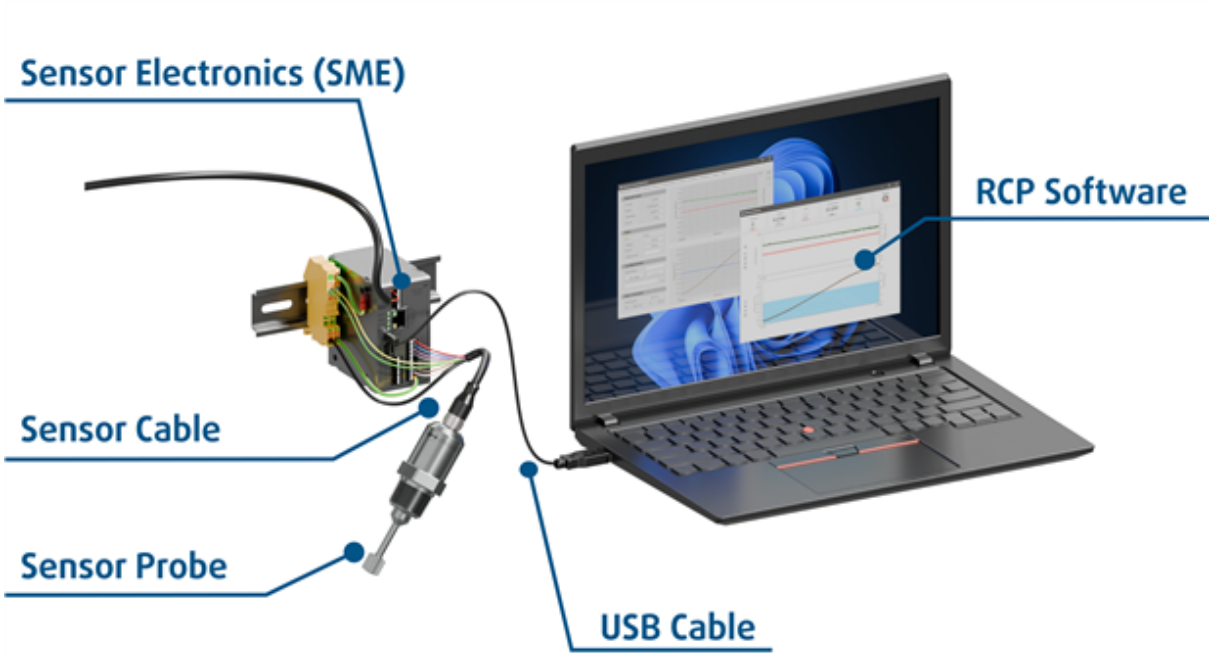

4.1 Installation and startup procedure

1. **Sensor cable connection** Connect the sensor cable to the sensor probe using the M12 8-pin circular connector. Ensure the connector is fully inserted and securely tightened into the M12 socket on the probe. Connect the opposite end of the sensor cable, which terminates in 8-pin terminals, to the corresponding terminals on the SME (see Section 11).

2. **SME connection and power-up** Connect the SME to the correct power supply as described in Section 11.9. Verify that the unit powers up correctly.

3. **RCP connection and initial configuration** Using a USB cable, connect the SME to a computer with the Rheonics Control Panel (RCP) software installed. Select the correct COM port from the Settings Tab in the software. Upon connection, the SME LEDs will blink until stabilizing in a green color. Find more information about RCP in Section 15. Communication and configuration details are provided in Section 14.

4. **Air check (recommended)** Whenever possible, perform an initial air check before installing the probe in the process. With the probe in air, allow the SME to complete its boot sequence. Within a few seconds, the Sensor LED should begin blinking green, indicating normal operation (see Section 12). Confirm that stable baseline readings are observed while the probe remains in air. The viscosity value and density should be read zero. For more information, refer to the support portal[3].

5. **Power down before installation** Once the air check is completed, power off the SME before proceeding with installation of the probe in the process.

6. **Process installation** Install the SRD probe in the process according to section 8.

[3] https://rheonics.com/support/sensor-air-check

©Rheonics

7. **Verification during operation** Once the probe is installed, power on the SME. The sensor starts measuring automatically with density, viscosity and temperature measurements updating continuously. Verify the LEDs status during operation (see more in Section 12 and Section 12.2).
    - Power LED indicates correct power supply.
    - Sensor LED indicates if sensor readings are stable and reliable.
    - Comm LED indicates if Modbus protocol is being used.
    - Data LED indicates Ethernet communication is established.

NOTICE

For SME-TR/-TRD, LEDs indicators vary. See Section 12.2 for more information.

5 Sensor Configuration

The SRD is comprised of 3 components (sensor probe, sensor electronics and sensor cable), whereby each component has its own configuration code. The sensor configuration code is comprised of the configuration codes of the 3 components: Sensor probe, Sensor Electronics, Sensor cable.

Configuration Code: [Sensor probe configuration code]-[SME configuration code]-[Cable configuration Code]

Example: SRD-SS-D1-DCAL1-V1-VCAL1-T2-P2-X1-34N-E3-C1-C2-C3-C4-C7-CAB-STD-L10

- Sensor probe, see section 5.1
  e.g. SRD-SS-D1-DCAL1-V1-VCAL1-T2-P2-X1-34N
- Sensor electronics, see section 5.3
  e.g. E3-C1-C2-C3-C4-C7
- Sensor cable, see section 5.2
  e.g. CAB-STD-L10

Sensor Probe	Sensor Cable	Sensor Electronics
		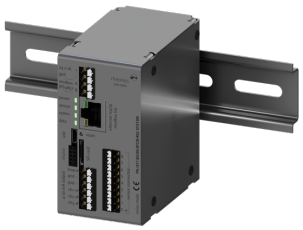

Table 4: Components of the SRD

©Rheonics

5.1 Probe configuration by order code

The probe specifications are reflected in the SRD probe code stated in the datasheet provided with the sensor. SRD probe code structure is:

SRD-[MA]-[COA]-[CERT]-[DEN RAN]-[DEN-CAL]-[VIS RAN]-[VIS CAL]-[T]-[P]-[X]-[OPT]

The individual components of the code are described in the following sections. Table 5 shows the general specification that applies to all SRD sensor probes.

Specification	Options
Operating technology	Balanced Torsional Resonator BTR
Max. Flow velocity	10 m/s
IP Rating	IP 69K
Temperature sensor	Pt1000 Class B
Reproducibility	Better than 0.1%
Connector	M12 8-pin, A-coded, male

Table 5: SRD sensor probe general specifications.

5.1.1 Material [MA]

The SRD is available in the following materials:

[SS]: Stainless steel: Fluid-exposed materials are: 1.4435/1.4404/1.4401/1.4115
[C22]: Hastelloy C22. Fluid-exposed materials are: 2.4607/2.4602

Specified material applies to the whole sensor probe, except for the back end (including the M12 connector) which is always made of Stainless Steel 316L, as shown in figure 3. The transition between Stainless Steel 316L and the specified material occurs somewhere before the process connection.

Figure 3: SRD probe material detail

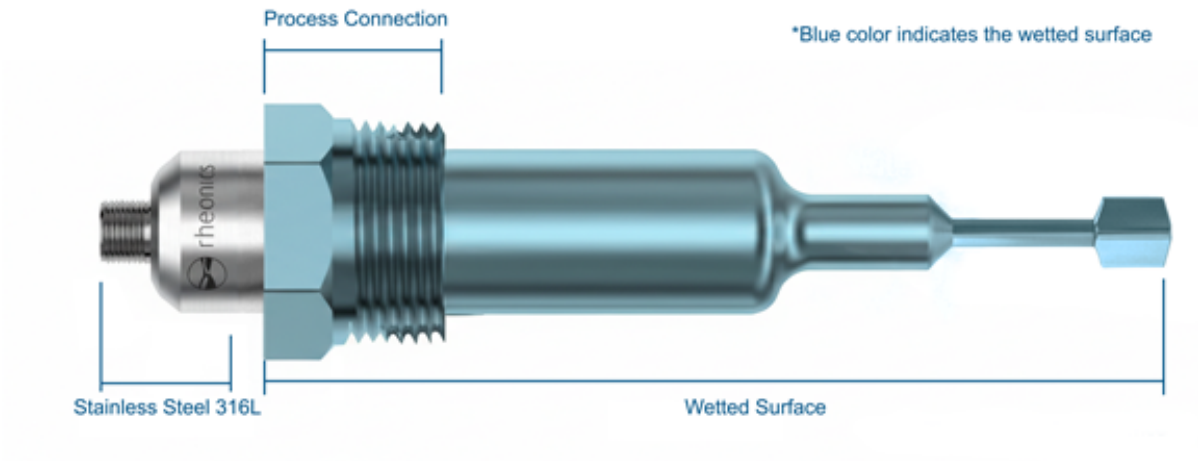

5.1.2 Coating [COA]

Coatings on the SRD are optional and only used for specific applications. The available options are:

[TF]: PTFE Coating

PTFE coating minimizes chances of deposits accumulation on SRD sensor probe that would affect accuracy of readings.

NOTICE

PTFE coating is not free of pin holes and is not suited for chemical protection. The coated surface must be treated with great care, as coating can be easily chipped by contact with solid materials.

5.1.3 Certification [CERT]

The SRD is offered with the following regulatory certifications:

5.1.3.1 Regulatory Conformance Certifications

The SRD is offered with the next regulatory conformance:

["-"]: CE Conformité Européenne - added by default
[RCUL]: UL OrdLoc Certification

5.1.3.2 Certification: Intrinsic Safety

The SRD is available as an intrinsically safe version with the following certificates:

[EXIA]: ATEX/IECEx
[EXJP]: Japanese Intrinsically Safe JPEX
[EXKC]: Korean Intrinsically Safe KCs
[EXD]: Intrinsically Safe for dust environments
[EXHZ]: Hazardous locations US Zones
[EXHD]: Hazardous locations US Divisions
[EXHC]: Hazardous locations Canada
[EXHZD]: Hazardous locations US Zones, Dust
[EXHDD]: Hazardous locations US Division, Dust
[EXHCD]: Hazardous locations Canada, Dust

WARNING

For the installation of an intrinsically safe SRD, follow the SR-EX manual

5.1.3.3 Certification: 3-A and EHEDG

Some variants of the SRD are available with a EHEDG or 3-A certificate. Available options are:

[HS3A]: 3-A Certificate
[HSEG]: EHEDG-Certificate
[HSNC]: Rheonics hygienic design no certificate (all wetted surfaces below Ra 0.8)

NOTICE

Hygienically certified sensor probes must be installed according to chapter 8.4.1 for EHEDG/3-A compliance

5.1.4 Density range and calibration

The SRD is available in different density ranges as well as accuracy classes.

5.1.4.1 Density Range [DEN RAN]

Available density ranges for SRD are:

[D1]: $0 - 1.5\ ^{g}/_{cc}$
[D2]: Specified in order, up to $4\ ^{g}/_{cc}$

The SRD sensor probe will not measure above the selected density range. Exceeding the density range will not damage the sensor probe, provided the fluid forces do not bend or damage the sensor probe.

5.1.4.2 Accuracy [DEN CAL]

The SRD is calibrated with Newtonian fluids. The following accuracy options are available:

[DCAL1]: Standard density accuracy: $\pm 0.01^{g}/_{cc}$ ($10^{kg}/_{m^3}$ | $0.083^{lb}/_{gal}$)
[DCAL2]: Extended calibration: Up to $\pm 0.001^{g}/_{cc}$ ($1^{kg}/_{m^3}$ | $0.0083^{lb}/_{gal}$)

For DCAL2 Rheonics can certify the density accuracy at one of the following reference densities:
[DC08]: $\rho = 0.8^{g}/_{cc}$
[DC10]: $\rho = 1.0^{g}/_{cc}$
[DC13]: $\rho = 1.3^{g}/_{cc}$
[DC16]: $\rho = 1.6^{g}/_{cc}$
[DC22]: $\rho = 2.2^{g}/_{cc}$
[DC27]: $\rho = 2.7^{g}/_{cc}$

The density accuracy of DCAL2 is valid for a range of $\pm 0.2^{g}/_{cc}$ near the certified density point.

NOTICE

The SRD is calibrated using Newtonian fluids and can be checked according to the process described in section 13.1. The characteristics of some non-Newtonian fluids not only influences the viscosity measurement but also the density measurement. This is common in e.g. slurries and can be compensated by an offset correction via scaling 13.4

NOTICE

The SRD sensor probe does not require re-calibration under normal operational conditions. However, abrasive processes affect the density reading and Rheonics recommends periodic re-calibration of the sensor probe 13.4

5.1.5 Viscosity range and calibration

The SRD is available in different viscosity ranges as well as accuracy classes.

5.1.5.1 Viscosity Range [VIS RAN]

Available viscosity ranges for SRD are:

[V1]: 1-3,000 $mPa \cdot s$
[V2]: 1-10,000 $mPa \cdot s$

The SRD sensor probe will not measure above the selected viscosity range. Exceeding the viscosity range will not damage the sensor probe, provided the fluid forces do not bend or damage the sensor probe. The SRD will measure below the selected viscosity range, but the accuracy cannot be guaranteed.

5.1.5.2 Accuracy [VIS CAL]

The SRD is calibrated with Newtonian fluids. The following accuracy options are available:

[VCAL1]: Standard: $\pm 5\%$ of reading or $\pm 0.1 mPa \cdot s$, whichever is greater
[VCAL2]: Extended calibration: Up to $\pm 1\%$ of reading or $\pm 0.1 mPa \cdot s$, whichever is greater

The standard calibration accuracy VCAL1 is valid within the viscosity range V1. Extended viscosity ranges (V2) enable the viscosity measurement outside the standard range. The extended calibration accuracy (VCAL2) is only valid for a pre-defined subrange during the order process. The following subranges are available:

[SV1]: 1-10 $mPa \cdot s$
[SV3]: 10-100 $mPa \cdot s$
[SV5]: 100-1000 $mPa \cdot s$
[SV6]: 1000-3000 $mPa \cdot s$

The SRD sensor probe does not require re-calibration under normal operational conditions. For critical or abrasive processes, Rheonics recommends annual re-calibration of the sensor probe to either adjust the calibration or verify the sensor's proper operation. This is typical in industries with elevated quality standards such as the pharma industry, or abrasive environments such as slurries. The calibration process is described in section 13.1

NOTICE

The SRD is well-suited to measure non-Newtonian fluids, where the viscosity is shear dependent. The SRD performs a single-point measurement at a relatively high, fluid-dependent shear rate. For shear thinning fluids, the SRD will measure a lower viscosity than traditional instruments. From a process control perspective, high repeatability and stability of measurements for the same fluid is fundamental, things at which Rheonics SRD excels.

©Rheonics

5.1.5.3 Shear rate estimation

Rheonics type-SR sensors measure viscosity under an oscillatory shear rate, which differs from traditional rotational instruments. For most fluids including non-Newtonian fluids, an effective rate can be calculated using equation 1. The measured viscosity should match the viscosity measurement of traditional rotational rheometers at the calculated effective shear rate.

$$\gamma = \frac{V_{(R)}}{\sqrt{\frac{2\eta}{\rho\omega}}} \tag{1}$$

With: γ: Effective shear rate / $V_{(R)} = 0.05^{m}/_{s}$: Velocity amplitude / $\omega = 2\pi \cdot 7500^{rad}/_{s} = 47124^{rad}/_{s}$ Angular frequency / η: Dynamic viscosity / ρ: Fluid density

Figure 4: Shear Rate vs Viscosity for Type-SR sensor

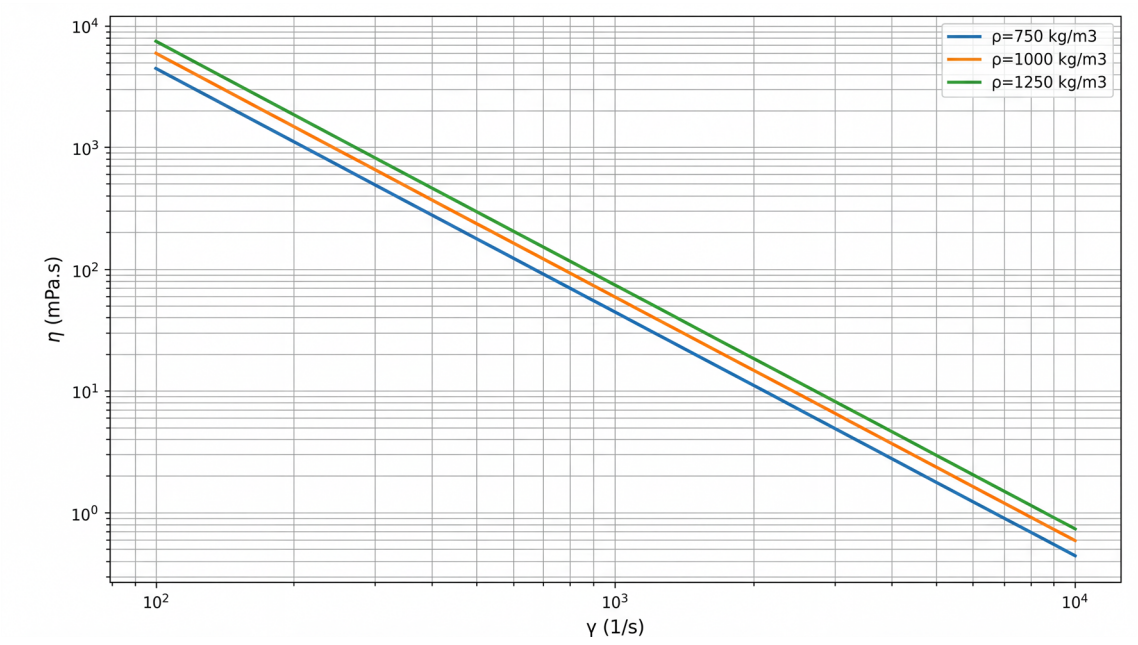

5.1.6 Temperature range [T]

Temperature limits are valid for the entire sensor probe, including the M12 connector on the sensor probe.
The standard lower temperature limit is -20 °C (-4 °F). Where operation below this threshold is required, an extended low-temperature prefix code must be added to the order code [T]:
[LT4]: -40 °C (-40 °F)
[LT7]: -70 °C (-94 °F)
[ULT]: Ultra-low temperature (up to -200 °C [-328 °F])
If the standard lower limit is sufficient for the application, no prefix code is required.
The upper temperature limit is defined by order code [T] and must always be specified:
[T0]: 75 °C (165 °F)
[T1]: 125 °C (250 °F)
[T2]: 150 °C (300 °F)
[T3]: 175 °C (350 °F)
[T4]: 250 °C (480 °F)
[T5]: 285 °C (545 °F)
[TX]: Higher than 285 °C (545 °F) - Temperature limit defined in order

NOTICE

The limit defined by the code [T] is the maximum temperature the sensor probe can be exposed to, whether the sensor probe is connected to the SME electronics or not. Exceeding the temperature rating may permanently damage the sensor probe.

NOTICE

The temperature rating of the SRD does not cover the cable nor cable connector. Use a suitable sensor cable dependent on ambient temperature, process temperature and insulation around the sensor probe's M12 connector.

5.1.7 Pressure range [P]

Pressure rating only applies to the fluid-exposed area of the sensor probe. All SRD sensor probes can be used from vacuum to their maximum pressure rating defined by code [P]. Offered [P] options are:
[P1]: 15 bar (200 psi)
[P2]: 70 bar (1000 psi)
[P3]: 200 bar (3000 psi)
[P4]: 350 bar (5000 psi)
[P5]: 500 bar (7500 psi)
[P6]: 750 bar (10000 psi)
[P7]: 1000 bar (15000 psi)
[P8]: 1500 bar (20000 psi)
[PX]: Higher than 1500 bar (20000 psi) - Pressure rating defined in order

NOTICE

For pressure classes up to P5, SRD viscosity and density reading are independent of pressure, though the fluids viscosity and density reading tends to increase with increasing pressure. Active pressure-compensation using an external pressure gauge may be required for P6 and above. Contact the Rheonics Support Team for more information.

©Rheonics

5.1.8 Variants [X]

SRD sensor probes are offered in different variants that mainly vary in insertion length and process connection. Specific variants also vary by total length and probe diameter. Options are:
[X1]: Short probe, threaded connection
[X2]: Short probe, custom flange (standard insertion length)
[X3]: Short probe, Tri-Clamp flange (standard insertion length)
[X4]: Short probe, custom flange (flush or minimum insertion length)
[X5]: Long probe, custom flange ”B” (custom insertion length ”A”)
[X6]: Slim probe, custom flange ”B” (custom insertion length ”A)
[X7]: Slim probe selected by total length ”L”, pressure fitting
[X8]: Back thread probe, custom flange ”B”, adaptable for teletube extension
[X9]: Specialized probe variants

Figure 5 shows the base variants: Short probe, Long probe, Slim probe and Back thread probe, without process connections. Type of process connections and placement are configurable during the order.

Figure 5: SRD probe base variants without process connection - Units: mm [in]

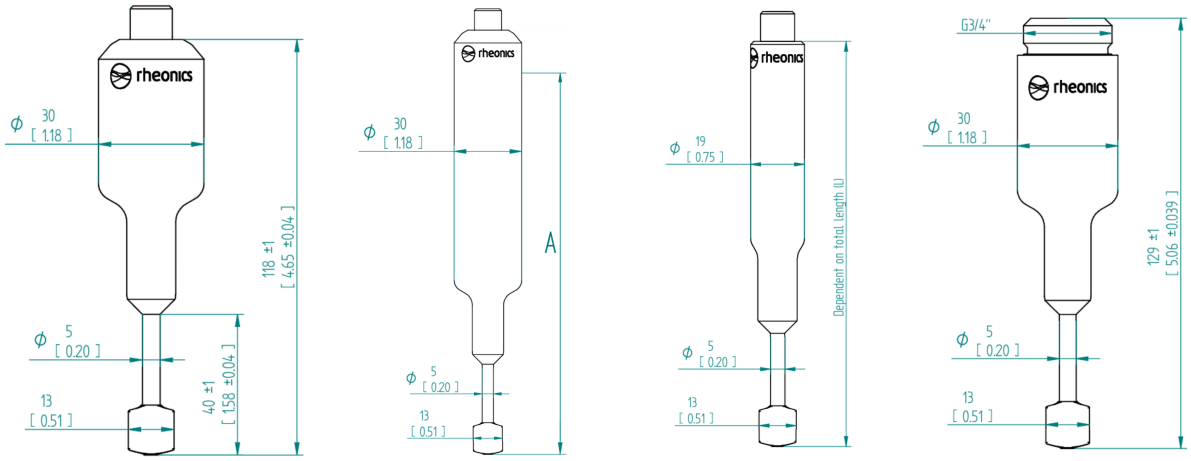

(a) Short probe (b) Long probe (c) Slim probe (d) Back thread probe

5.1.8.1 Probe Examples

Figure 6 and 7 show SRD sensor probe standard and customizable variants. Table 6 list the most common codes used in probe variants. Codes -AXXX, -BXXX and -LXXX are of special interest as they are custom properties- They can take different values depending on the customer’s requirements.

Variant code	Process Connection
-34N	3/4” NPT
-12G	G 1/2”
-BVN	Varinline N
-BVNM	Varinline N additional bevel machined
-B05T	Tri-Clamp D 34 ASME-BPE
-B15T	Tri-Clamp D 50.5 ASME-BPE
-B20T	Tri-Clamp D 64 ASME-BPE
-B30T	Tri-Clamp D 91 ASME-BPE
-AXXX	Custom Insertion Length in mm.
-BXXX	Custom Flange
-LXXX	Custom Total Length in mm.

Table 6: Main codes used in SRD sensor probe variants configuration

Figure 6: SRD main probe variants - Units: mm [in]

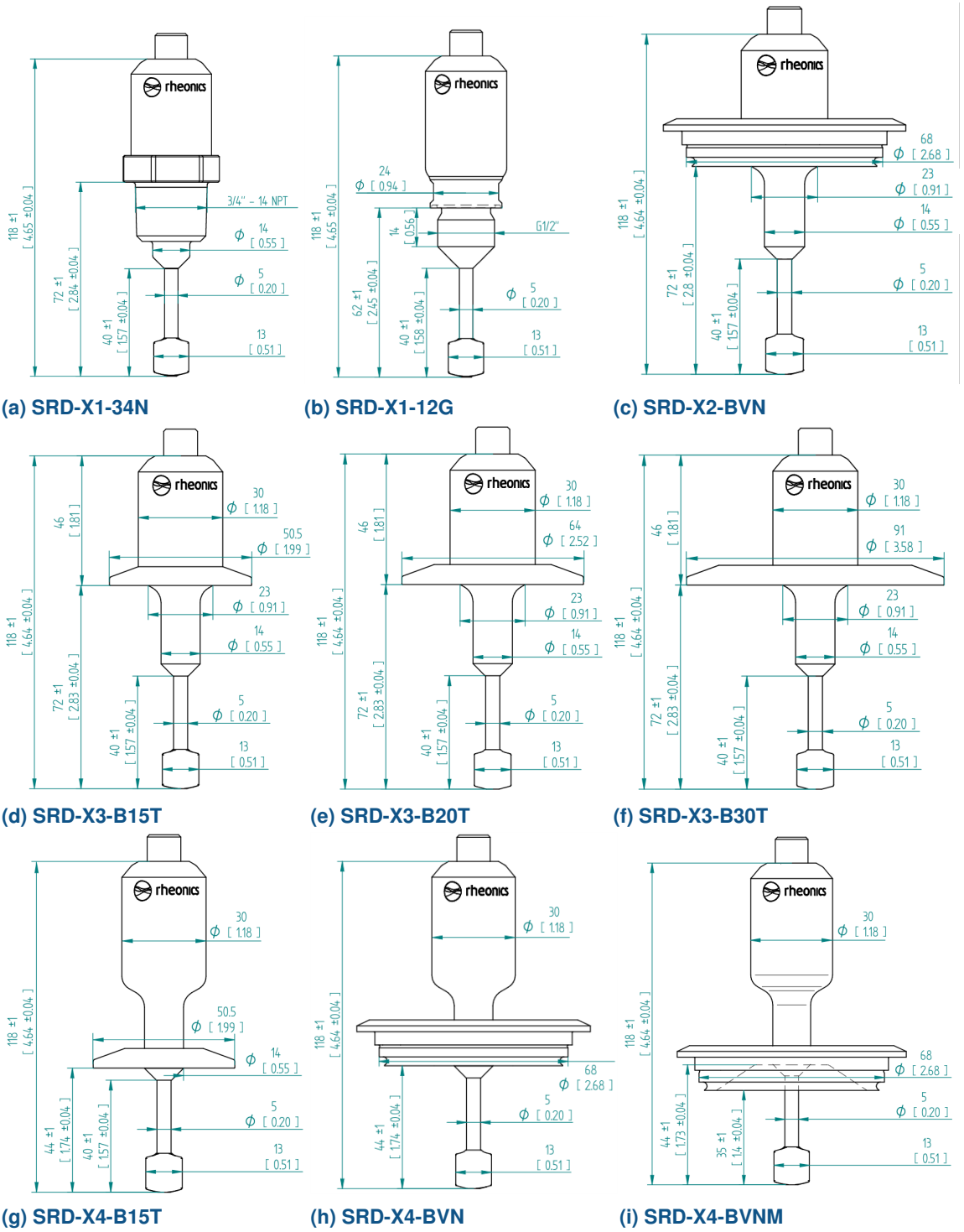

(a) SRD-X1-34N (b) SRD-X1-12G (c) SRD-X2-BVN

(d) SRD-X3-B15T (e) SRD-X3-B20T (f) SRD-X3-B30T

(g) SRD-X4-B15T (h) SRD-X4-BVN (i) SRD-X4-BVNM

©Rheonics

Figure 7: SRD main customizable probe variants - Units: mm [in]

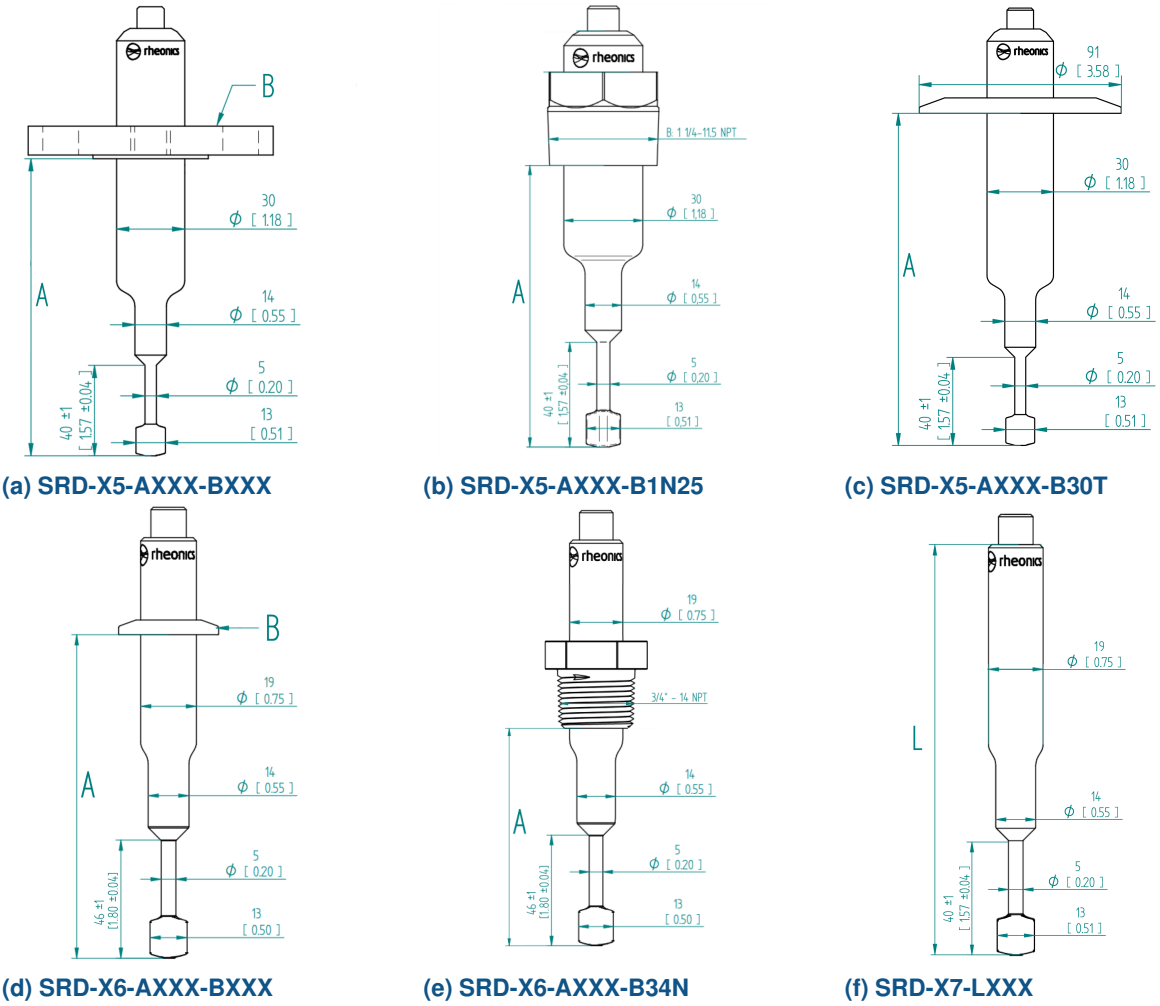

(a) SRD-X5-AXXX-BXXX (b) SRD-X5-AXXX-B1N25 (c) SRD-X5-AXXX-B30T

(d) SRD-X6-AXXX-BXXX (e) SRD-X6-AXXX-B34N (f) SRD-X7-LXXX

Figure 8: Rheonics SRD rear-mounted thread variant with Teletube extension - Units: mm [in]

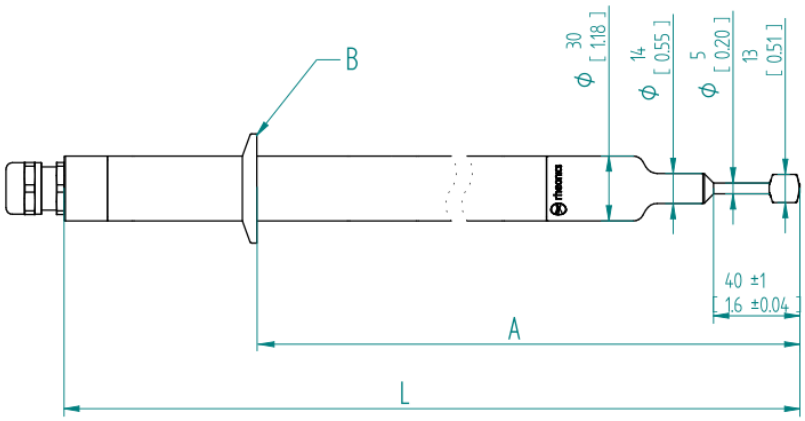

Figure 9: SRD-X9 specialized probe variants - Units: mm [in]

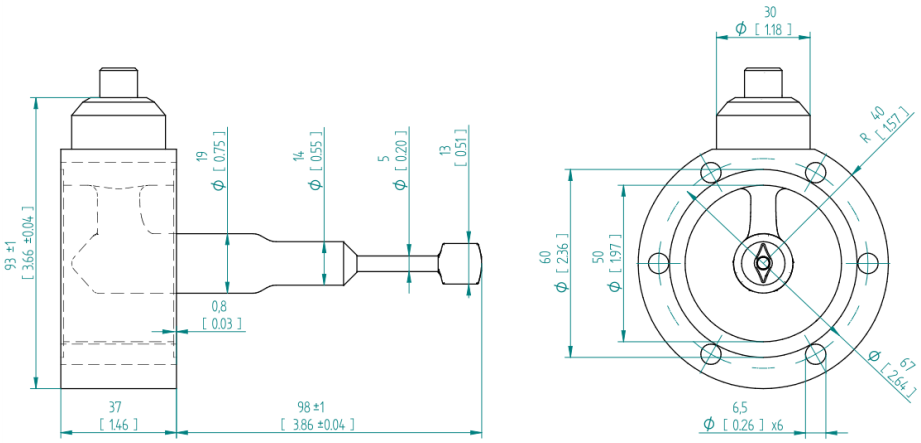

(a) SRD Stargate Low-Pressure variant

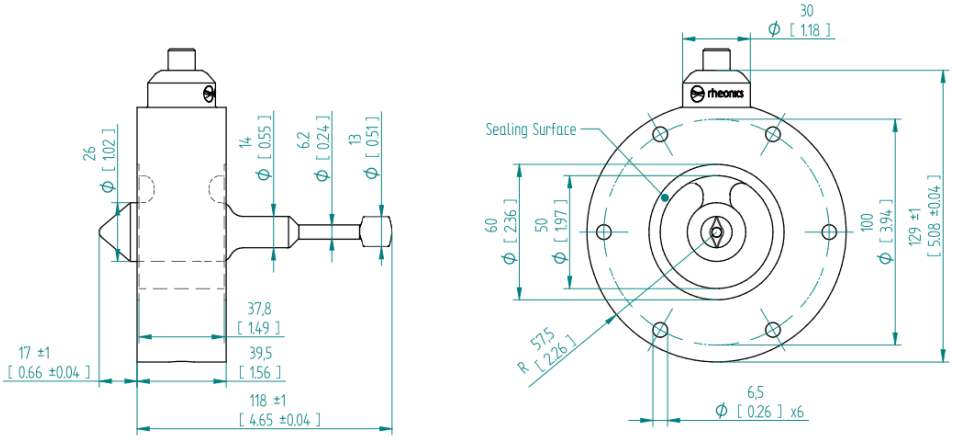

(b) SRD Stargate High-Pressure variant

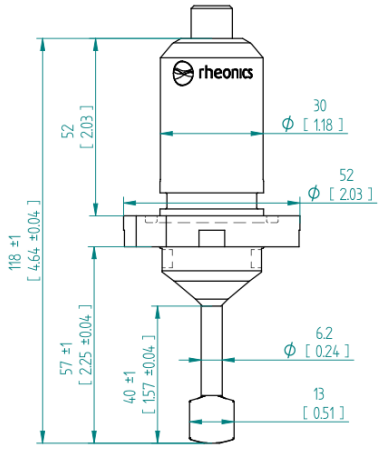

(c) SRD-X9-HP High-Pressure variant - Units: mm [in]

©Rheonics

5.1.9 Options [OPT]

The options cover custom features of the sensor probe. Common options include:

- Extended or non-standard insertion lengths.
- Rear-mounted G3/4” thread (TT). See Figure 10 as example.
- Fixed transmitter (FT), see Figure 11. This option allows the mounting of the SME-TRD and -TR electronics (Section 5.3) on the Type-SR sensor probes. This creates a single-piece sensor unit installed in the line containing all features of probe and electronics.
- Special surface finishes (e.g., electropolished)
- Custom accessories for mounting and process connection adaptors

Contact Rheonics for available options and pricing.

Figure 10: Rheonics SRD Variant X3-B15T with TT option - Units: mm [in]

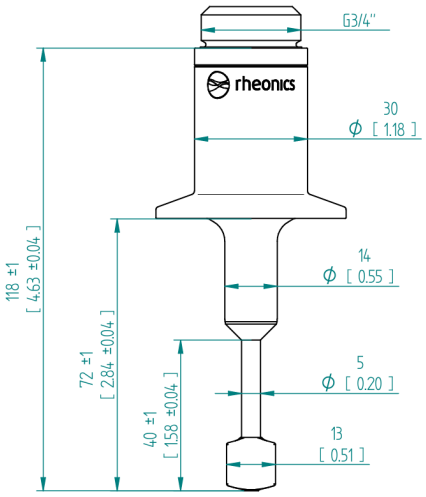

Figure 11: Rheonics SRD Fixed Transmitter



5.2 Rheonics Sensor Cable and Connection Variants

Rheonics sensor cables provide the electrical connection between the sensor probe and the SME (Sensor Module Electronics).

Standard and special cable variants are described below, along with their construction, materials, and environmental ratings[4].

5.2.1 Cable Construction and Common Characteristics

Rheonics sensor cables generally share the following construction features:

- The order code for the sensor cable is CAB-[CVAR]-[LXX], where CVAR represents the sensor cable type (STD, 90, EX, HT, IP69K, etc.) and LXX represents the cable length in meters.
- 8 conductors (4 twisted pairs) with shielding for noise immunity.
- M12, A-coded, 8-pin female connector on the cable.
- Selectable cable jacket based on environmental requirements.

5.2.2 Cable Variant Descriptions

- **180° Standard Cable** Straight molded M12 cable with PUR insulation. Suitable for general industrial environments with good abrasion, oil, and chemical resistance.
- **90° Angled Cable** Same cable as the standard version but with a 90° angled connector for installations with limited space.
- **High-Temperature Cable** Cable designed for high-temperature environments using PTFE insulation with high thermal and chemical resistance.
- **IP69K Cable** Cable designed for washdown environments with resistance to high-pressure water and cleaning chemicals.
- **EX Cable** Cable designed for intrinsically safe installations using a special PVC jacket suitable for EX environments.

5.2.3 Available Cable Variants and Part Numbers

Cable part number: CAB-[CVAR]-[LXX]

CVAR[5]	STD	90	HT	IP69K	EX
Image					
Connector Orientation	Straight	90° Angled	Straight	Straight	Straight
Insulation Material	PUR	PUR	PTFE	TPE-S	PVC
Connector IP rating	IP68	IP68	IP65	IP69K	IP67
Connector + Cable Temp Rating	-30 ℃ to +90 ℃	-30 ℃ to +90 ℃	Up to 150 ℃	-20 ℃ to +105 ℃	-30 ℃ to +80 ℃
Lengths	5/10/30 m	5/10/30 m	5 m	5 m	5/10/30 m

Table 7: Rheonics Sensor Cable Comparison

[4] https://rheonics.com/docid/sup-ele-scable
[5] This order code refers to the available cable variants.

©Rheonics

5.3 Sensor Module Electronics Configuration

Rheonics sensor electronics (SME) is the ultra-fast and robust module electronics of Rheonics sensors. It is connected to a sensor probe to read the signals from the probe, translate them to temperature, viscosity, and/or density, and transmit the data through multiple industrial communication protocols available by default or under request.

5.3.1 Variants by order code

Different SME variants are offered by Rheonics and are coded with the prefix “E” in the electronics order code. The next table shows the main codes and meanings.

SME electronics code structure: [EVAR]-[EMAT]-[OPT]-[COM]-[ADD]

For proper operation of Rheonics sensors, the SME electronics must be powered on and correctly connected to the sensor probe using the Rheonics-supplied sensor cable. Each SME is factory-paired with a specific sensor probe and must only be used with the probe it was delivered with. The SME electronics are not interchangeable between probes. If there is a requirement to connect SME electronics to a different sensor probe than the original factory-paired unit, please contact the Rheonics Sales Team for guidance.

Category	Code	Description
Electronics Variant	[EVAR]	E1: SME-TRD E2: SME-TR E3: SME-DRM E4: SME-BOX
Housing options	[EMAT] [6]	”-”: Standard material, Aluminium (for E1 and E2), Stainless Steel (E3) SS: Stainless Steel (for E1 and E2 only)
Communication	[COM]	C1:4-20mA C2:Modbus RTU C3:USB C4:Ethernet TCP C5:Bluetooth LE 4.0 C6:Modbus TCP C7:Ethernet/IP C8:HART C9:PROFINET C10:WirelessHART C11:CAN C12:IO-LINK
Adds-on	[ADD]	

Table 8: Order code and general specifications

[6] Only applies to E1/E2

5.3.2 Specifications by variant

5.3.2.1 SME-TRD (E1) and SME-TR (E2)

The SME electronics comes in different housings, suited for DIN-Rails (E3), outdoor installation (E1/E2) or lab installations (E4). The core of the sensor electronics, which is the Type SME, is identical for all variants.

5.3.2.2 SME-TR(D) with and without display (E1/E2)

The SME-TR(D) has the SME unit housed either in a blind solid enclosure (Variant SME-TR) or in an enclosure with a display (Variant SME-TRD), respectively. Both variants are designed for outdoor installations due to their higher ingress protection ratings. The display on the variant SME-TRD features a multi-line LCD and LED indicators to visualize up to three real-time values and to monitor sensor operation and communication status. Additional details are provided in Section 12.2.

- **Nominal supply voltage:** 24 V DC
- **Acceptable voltage range:** 18–36 V DC
- **Maximum current consumption:** 200 mA
- **Recommended current capacity:** $\geq$ 400 mA
- **Maximum power consumption:** 5W
- **Recommended power supply rating:** min. 10 W
- **Enclosure material:** Aluminum with sprayed Polyurethane (PUR) coating
- **O-Ring seal material:** VMQ
- **Protection rating:** IP66 / IP68 (1 m)
- **Type rating:** NEMA 4X
- **Weight:** 1.7 kg (3.8 lbs)
- **Ports:** 3 ports of $^1/_2$" NPT
- **Installation:** Outdoors.

Figure 12: Rheonics SME-TR(Left) and Rheonics SME-TRD(Right)



©Rheonics

5.3.2.3 SME-DRM (E3)

The SME-DRM is designed for installation on 35 mm DIN rails and inside cabinets. Some specifications of the SME-DRM are:

- **Nominal supply voltage:** 24 V DC
- **Acceptable voltage range:** 18–36 V DC
- **Maximum current consumption:** 200 mA
- **Recommended current capacity:** $\geq$ 400 mA
- **Maximum power consumption:** 5W
- **Recommended power supply rating:** min. 10 W
- **Housing material:** Stainless Steel 304 (1.4301)
- **Protection rating:** IP20
- **Weight:** 0.2 kg (0.4 lbs)
- **Installation:** DIN rail inside cabinets

Figure 13: Rheonics SME-DRM

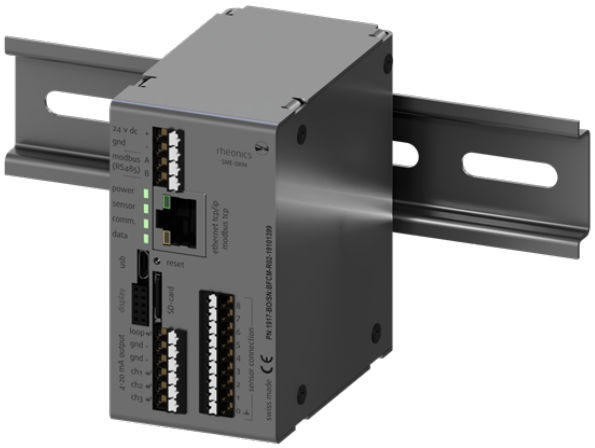

5.3.2.4 SME-BOX (E4)

The SME-BOX is a device designed for tabletop, desktop, or laboratory setups. It integrates a touch-panel industrial PC that runs Rheonics software directly, without the need for an additional external PC. Some specifications of the SME-BOX are:

- **Dimensions:** 365 $\times$ 280 $\times$ 220 mm (14.4 $\times$ 11 $\times$ 8.7 inch)
- **Power input:** 110 / 220 V AC
- **Power consumption:** Max. 100 W
- **Total weight:** 8.1 kg (17.9 lb)
- **Operating temperature:** Max. 65°C (150°F) ambient
- **Communication interface:** 4$\times$ USB, 1$\times$ Ethernet, 1$\times$ HDMI, 1$\times$ RS232, 1$\times$ Wi-Fi
- **Sensor connection:** M12, A-coded, 8-pin
- **Computer OS:** Windows 10

Figure 14: Rheonics SME-BOX(a) and Rheonics SME-BOX back view(b)

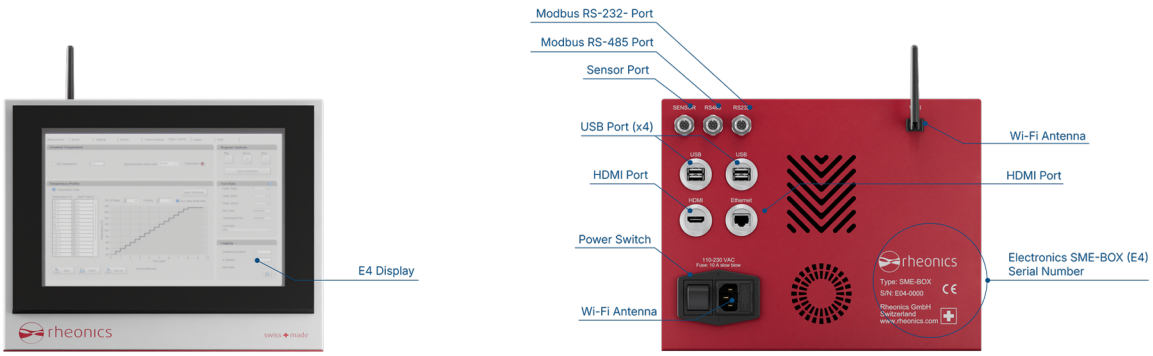

For operation, power the SME-BOX (E4) with either 110VAC or 220VAC. Connect the sensor via the sensor cable to the sensor port. Once the Power Switch is flipped, the computer will boot automatically and is operational. External devices can be connected to the SME-BOX via RS485 and USB.

User and password

The login credentials of the SME-BOX (E4) are:
User: Administrator
Password: rheonics[SN]
e.g. for serial number E04-0000, password is: rheonicsE04-0000

If access to the computer is required, use the USB, Ethernet, or HDMI connections. For more information, see the RCP Software Manual. [7] **Troubleshooting**

- **Sensor issues**
  - SME electronics–related issues[8]
  - Sensor cable–related issues[9]
  - Mechanical installation issues of the probe[10]
- **Software issues**[11]
  - Issues related to the Rheonics Control Panel (RCP)
- **Blown fuse**
  - The SME-BOX (E4) is protected by a 1.6 A slow-blow (T) fuse with dimensions 5 mm × 20 mm.
  - A compatible spare fuse is provided in the fuse compartment upon delivery.
  - To replace the fuse, disconnect the device from the power supply, open the fuse holder, remove the defective fuse, and insert a new fuse of the specified type.

NOTICE

If you are unable to find a solution to your issue or if any information is unclear, contact the Rheonics support team directly at the provided support email.

[7] https://rheonics.com/rheonics-control-panel-rcp/
[8] https://rheonics.com/docid/sup-ele-usbcom.
[9] https://rheonics.com/docid/sup-ele-scable.
[10] https://rheonics.com/docid/sup-mech-inst.
[11] https://rheonics.com/docid/sup-sof-rcptroub.

5.3.3 Environmental and EMC Specifications

5.3.3.1 Operating Environment

The SME electronics are designed for continuous operation in industrial environments. The table below summarises the permitted operating and storage temperature ranges, humidity limits, altitude rating, and ingress protection class for each electronics variant.

Parameter	SME-TRD/TR (E1/E2)	SME-DRM (E3)	SME-BOX (E4)
Operating temp	-20 to $+65\,°C$	-20 to $+65\,°C$	0 to $+65\,°C$
Storage temp	-40 to $+85\,°C$	-40 to $+85\,°C$	-20 to $+60\,°C$
Humidity	0–95% non-cond.	0–95% non-cond.	10–90% non-cond.
Altitude	Up to 5000 m	Up to 5000 m	Up to 5000 m
IP rating	IP66/IP68	IP20	IP20

Table 9: Operating Environment

5.3.3.2 EMC Compliance

All Rheonics SME electronics are designed and tested to comply with applicable European EMC directives for industrial measurement and control equipment. Compliance covers both immunity to external electromagnetic disturbances and limits on conducted and radiated emissions. The table below lists the relevant standards and the specific test conditions or performance levels applicable to the SME.

Standard	Description
EN 61326-1	EMC for measurement/control equipment — industrial environment
EN 61326-2	Particular requirements for transducers with integrated or remote signal conditioning
EN 61000-4-2	ESD immunity: contact 4 kV, air 8 kV
EN 61000-4-3	Radiated RF immunity: 10 V/m, 80 MHz–1 GHz
EN 61000-4-4	Fast transient/burst: 2 kV power, 1 kV signal
EN 61000-4-5	Surge: 1 kV L-L, 2 kV L-E
CISPR 11	Emissions: Class A (industrial)

Table 10: EMC Standards

5.4 Sensor Configuration Code Overview

Specification	Code	Options
Probe type	[TY]	SRD: Inline Density and Viscosity Meter
Material	[MA]	SS: Stainless Steel 316L C22: Hastelloy C22
Coating	[COA]	TF: PTFE Coating (only available for [X]: X1, X2, X3)

Certification	[CERT]	"-": CE Certification RCUL: UL OrdLoc Certification marking (may be included by default) EXIA: ATEX/IECEx intrinsically safe EXJP: Japanese Intrinsically Safe JPEX EXKC: Korean Intrinsically Safe KCs EXD: Intrinsically Safe for dust environments EXHZ: Hazardous locations US Zones EXHD: Hazardous locations US Divisions EXHC: Hazardous locations Canada EXHZD: Hazardous locations US Zones, Dust EXHDD: Hazardous locations US Division, Dust EXHCD: Hazardous locations Canada, Dust HSEG: EHEDG Certificate HS3A: 3-A Certificate HSNC: Food-grade surface roughness and design requirement without hygienic certification
Density range	[DEN RAN]	D1: 0 to 1.5 g/cc D2: Specified in order, up to 4 g/cc
Density calibration	[DEN CAL]	DCAL1: Standard: ± 0.01g/cc (10 kg/m3, 0.083 lb/gal) DCAL2: Extended calibration: up to ± 0.001 g/cc (1 kg/m3, 0.0083 lb/gal)
Viscosity range	[VIS RAN]	V1: 1 to 3,000 mPa.s V2: 1 to 10,000 mPa.s
Viscosity calibration	[VIS CAL]	VCAL1: Standard: $\pm 5\%$ of reading or ± 0.1 mPa.s, whichever is greater VCAL2: Extended calibration: up to $\pm 1\%$ of reading or ± 0.1 mPa.s, whichever is greater
Temperature rating	[T]	Low temperature options: ULT: Ultra-low temperature (up to -200 ℃) LT7: -70 ℃ (-94 ℉) LT4: -40 ℃ (-40 ℉) Standard is -20 ℃ (-40 ℉) to max value by code: T0: 75 ℃ (165 ℉) T1: 125 ℃ (250 ℉) T2: 150 ℃ (300 ℉) T3: 175 ℃ (350 ℉) T4: 250 ℃ (480 ℉) T5: 285 ℃ (545 ℉)
Pressure rating	[P]	From vacuum to max value by code P1: 15 bar (200 psi) P2: 70 bar (1000 psi) P3: 200 bar (3000 psi) P4: 350 bar (5000 psi) P5: 500 bar (7500 psi) P6: 750 bar (10000 psi) P7: 1000 bar (15000 psi) P8: 1500 bar (20000 psi)

Variant	[X]	X1: Short probe, threaded connection X2: Short probe, custom flange (standard insertion length) X3: Short probe, Tri-Clamp flange (standard insertion length) X4: Short probe, Tri-Clamp fange (flush or minimum insertion length) X5: Long probe, custom flange ”B” (custom insertion length ”A”) X6: Slim probe, custom flange ”B” (custom insertion length ”A) X7: Slim probe selected by total length ”L”, pressure fitting X8: Back thread probe, custom flange ”B”, adaptable for Teletube extension X9: Specialized probe variants (e.g. HP).
Options	[OPT]	TT: G3/4” rear thread

Table 11: SRD Sensor Probe Configuration Options

Specification	Code	Options
Part name	-	CAB
Variant	[CVAR]	STD: Standard straight cable 90: Standard 90° Cable EX: Ex cable HT: HT Cable IP69K: IP69K cable
Length	[LXX]	05: 5 meters cable 10: 10 meters cable 30: 30 meters cable XX: Custom meters cable

Table 12: Sensor Cable Configuration Options

Specification	Code	Options
Variant	[EVAR]	E1: SME-TRD E2: SME-TR E3: SME-DRM E4: SME-BOX
Material	[EMAT]	“-”: Standard material, Aluminium (for E1 and E2), Stainless Steel (E3) SS: Stainless Steel housing (for E1 and E2 only)
Communication	[COM]	C1: 4-20mA C2: Modbus RTU C3: USB C4: RJ-45 Port C6: Modbus TCP C7: Ethernet/IP C8: HART C9: PROFINET C10: WirelessHART C11: CAN C12: IO-LINK
Add-onds	[ADD]	AP-SD0: Sand detector code

Table 13: SME Sensor Electronics Configuration Options

6 Technology and design

6.1 Operating principle

Rheonics Type-SR sensors operate based on the patented Balanced Torsional Resonator (BTR) technology. The resonator, i.e. sensing element of the SR-Series can be characterized as a harmonic oscillator with the following properties:

- Resonant frequency — the natural frequency at which the system oscillates with maximum amplitude when excited by an impulse or external driving force.
- Damping — the rate of energy dissipation per oscillation cycle.
- Driving (excitation) frequency — the frequency of the external force applied to maintain continuous oscillation.

In Rheonics Type-SR sensor probes,the probe's sensing element is part of the resonator (see section 6.2). The resonator has two masses, one visible on the sensing element, the other hidden inside the sensor probe, creating a balanced torsional oscillator, which is vibrationally isolated from its environment, making it insensitive to mounting conditions or external vibrations. This configuration allows the Type-SR probe to be compact, lightweight, and mechanically stable.

When the sensing element is immersed in a fluid, the fluid interacts with the sensing element and changes its resonant characteristics:

- Damping - During oscillation, the resonator shears the surrounding fluid. The resulting viscous friction dissipates mechanical energy from the oscillating system. Consequently the damping of the resonator increases. The degree of damping is primarily determined by the viscosity of the fluid. Higher-viscosity fluids dissipate more energy and therefore increase the damping of the resonator. The damping can be measured by either the vibration amplitude or slope of the phase-frequency curve as shown in figure 15a.

- Resonant frequency - If the shape of the sensing element is not cylindrical, the torsional motion of the resonator entrains a small volume of surrounding fluid. This adds effective mass (mass loading) to the resonator. As a result, the apparent inertia of the resonator increases and the resonant frequency decreases. The magnitude of this frequency shift depends primarily on the density of the fluid. Higher-density fluids produce greater mass loading and therefore a lower resonant frequency, see figure 15b.

Figure 15: Operating principle: Viscous damping and mass loading

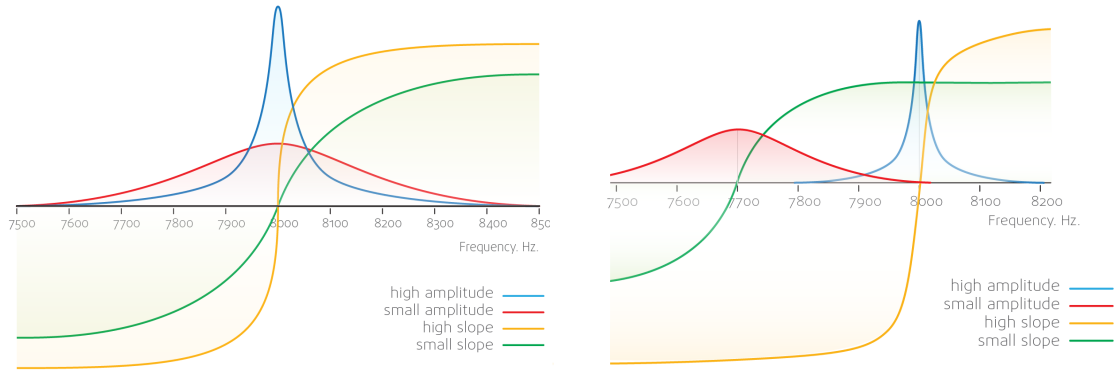

(a) Resonator response in fluids of different viscosities and same density

(b) Resonator response in fluids of different viscosities and densities

For the Type-SR sensors, the resonator is both excited and sensed using an electromagnetic transducer integrated into the sensor probe body (see Section 6.2). The sensor measurement electronics (SME) analyze the resonant frequency, damping to determine the viscosity and/or density of the fluid.

©Rheonics

The response of the resonator (amplitude and phase) can be plotted as functions of the excitation frequency. Two characteristic curves are obtained:

- Magnitude — vibration amplitude as a function of frequency.
- Phase — phase shift between excitation force and resonator response.

Consider an SRD sensor probe immersed in a low and a high viscous fluid with similar densities. Figure 15a shows the corresponding response phase and magnitude curves for both fluids. The higher damping by the high viscous fluids can be observed by 2 metrics:

- Higher viscous fluid has smaller amplitude (red)
- Higher viscous fluid has smaller slope of the phase-frequency curve (green)

Figure 15b shows the phase frequency curves of 2 fluids with different viscosities and densities. Here, we observe the following:

- Higher viscous fluid has smaller amplitude (red)
- Higher viscous fluid has smaller slope of the phase-frequency curve (green)
- Higher dense fluid has a smaller resonance frequency (red)

Rheonics SRD sensor probe's geometry is optimized to be sensitive to both density and viscosity properties of the fluid by measuring the resonant frequency and damping, respectively. Using our proprietary algorithm we can calculate the fluid's viscosity and density based on the measured resonance frequency and damping.

NOTICE

The SRD sensor measures the density, viscosity and temperature of a fluid in real-time. To learn more visit https://rheonics.com/technology/SRD

6.2 Probe main parts

This section details the primary parts and key dimensions of the SRD probe, as illustrated in figure 16 for the probe variant [VAR] -X1-34N. Operators must be familiar with the following terminology for proper mechanical and electrical connections.

6.2.1 Sensing Element

The sensing element is the only portion of the probe involved in measurement. SRD sensor is designed to measure the viscosity of a single-phase or multiphase fluid that is in close and narrow contact with its sensing element. Refer to section 8 for complete installation requirements.
A PT1000 temperature sensor is integrated directly at the sensing element. This placement ensures the temperature is measured precisely at the same location where the fluid's viscosity measurement is being taken, allowing temperature-compensated viscosity.

NOTICE

SRD sensing element is the same across all SRD probe variants, which allows the performance envelope to be similar across all variants.

6.2.2 Process Connection

The process connection is the component used to mechanically mount the SRD probe to the process vessel, tank, or pipeline.

6.2.3 Probe body

Sensor probe markings are labeled on the probe's body or flange. Diameter of probe's body varies between 30 mm and 19 mm, depending on the probe variant [VAR].

6.2.4 Electrical Connection

The electrical interface is located at the back end of the SRD probe. This is a standard M12 8-pin, A-coded connector. The probe must be connected to its paired SME electronics using the sensor cable delivered by Rheonics.

Figure 16: SRD probe main parts. Variant SRD-X1-34N used as reference.

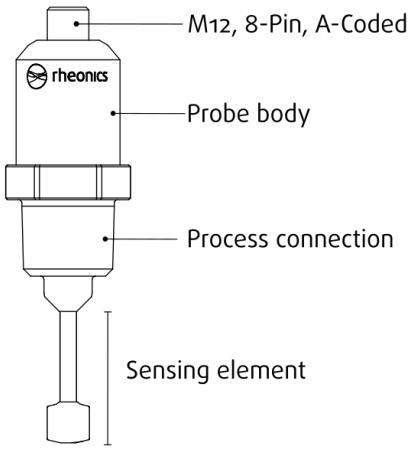

©Rheonics

6.3 Sensor Probe Markings

This section details the markings that can be found on the sensor probe body. Figure 17 shows an example of markings, however, the probe may only contain a subset of them. All probes carry a standard set of permanent markings such as the Rheonics logo, serial number, sensor type, manufacturer name, and CE mark. The serial number is of particular importance, as it uniquely identifies the sensor probe and is used to pair it with its sensor electronics during factory calibration. It must remain legible at all times. Additional markings may be present depending on the certifications ordered for the unit. These may include IECEx/ATEX marking, 3-A sanitary certification, or country-specific Ex codes.

Figure 17: Type-SR sensor probe markings.

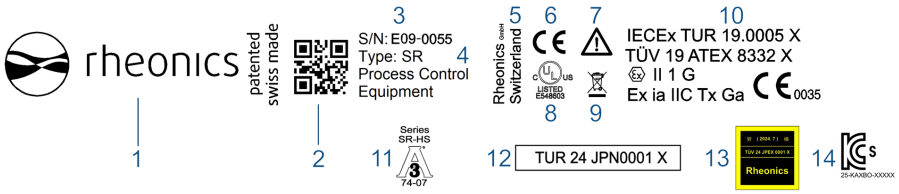

N°	Name	Note
1	Rheonics logo	-
2	QR-Code (Serial Number)	Represents Serial number
3	Serial Number (S/N or SN)	-
4	Type sensor	Always Type SR
5	Manufacturer and Country of Manufacturing	-
6	CE Marking	CE conformity
7	General warning	Consult safety information
8	UL Listed Mark	Product tested and certified by UL
9	WEEE Marking	Do not dispose of in household waste
10	IECEx/ATEX Marking	Optional, see section 5.1.3.2
11	3-A Marking	Optional, see section 5.1.3.3
12	Country specific EX-Code	Optional, see section 5.1.3.2
13	JPEX Marking	Product certified for Japan
14	KC Marking	Product certified for South Korea

Table 14: Sensor probe specifications.

NOTICE

Markings must not be removed, obscured, or altered. Rheonics suggests to maintain all markings clearly visible after installation.

7 Measurements

Rheonics inline sensors are designed to monitor the key physical parameters that govern fluid behaviour directly in the process line, without sampling or laboratory intervention. The primary measurements are:

- **Temperature:** measured directly by the integrated Pt1000 RTD at the probe tip.
- **Viscosity–density product ($\eta \cdot \rho$):** the raw quantity measured by the torsional resonator. The default viscosity reading is the dynamic viscosity, which requires a density input. In case of the SRD, the measured density is used, whereas the SRV uses a reference density (1 g/cc by default).
- **Density:** measured directly by the SRD only; not available on the SRV. The SRV has a default density that is used to calculate the dynamic and kinematic viscosity.

NOTICE

The SRV supports manual (constant value or temperature-dependent density curve) or automatic input of density to estimate dynamic and kinematic viscosity.

All other output parameters are derived quantities calculated from these core measurements in real time by the Sensor Electronics (SME). All models described in this section are configurable through the Rheonics Control Panel (RCP).

Parameter	Type	SRV	SRD	Primary Units
Temperature	Primary	✓	✓	°C, °F, K
Density	Primary	–	✓	g/cm^3, kg/m^3, lb/ft^3, API, °Baumé
Dynamic Viscosity	Derived	✓	✓	Pa·s, mPa·s, P, cP, Reyn
Viscosity–density product ($\eta \cdot \rho$)	Primary	✓	✓	mPa·s · g/cc
Kinematic Viscosity	Derived	✓	✓	cSt, mm^2/s, m^2/s, St
Temp.-Compensated Viscosity	Derived	✓	✓	mPa·s / cP
Temp.-Compensated Density	Derived	–	✓	g/cm^3, kg/m^3
Concentration	Derived	–	✓	°Brix, °Plato, °Baumé, OIML%, SG
ASTM-D341 Kinematic Viscosity	Derived	✓	✓	cSt
Cup Seconds	Derived	✓	–	s (Zahn, Ford, DIN, etc.)

Table 15: Overview of measurements.

7.1 Core Measurement Definitions

7.1.1 Viscosity

The primary quantities measured by the Rheonics torsional resonator are the product of dynamic viscosity and density ($\eta \cdot \rho$), as is typical for all vibrational viscometers. This product has no direct output. The dynamic viscosity η is obtained by dividing the measured $\eta \cdot \rho$ product by the fluid density ρ, which must be either configured as a constant value for the SRV (default density 1 g/cc) or measured directly by the SRD. Kinematic viscosity ν is in turn derived from dynamic viscosity by dividing again by the density. Both dynamic and kinematic viscosity are therefore always derived outputs.

©Rheonics

Unit	Symbol	Notes
Pascal-second	Pa·s	High-viscosity fluids, polymer melts
Millipascal-second	mPa·s	General industrial, scientific (= cP)
Poise	P	Legacy / historical references
Centipoise	cP	Pharmaceuticals, cosmetics, petrochemicals
Reyn	Reyn	Specialised British engineering applications

Table 16: Dynamic viscosity units

NOTICE

mPa·s = 1 cP. These two units are numerically identical and are the most commonly used in process control.

Unit	Symbol	Notes
Kinematic viscosity	mm^2/s	Kinematic viscosity SI unit (= cSt); preferred in engineering datasheets
Kinematic viscosity (SI)	m^2/s	SI base unit; 1 m^2/s = 10^6 cSt; used in research and scientific contexts
Centistoke	cSt	Most common in lubricants, oil & gas, automotive (1 cSt = 1 mm^2/s)
Stoke	St	CGS unit; 1 St = 100 cSt

Table 17: Kinematic viscosity units

NOTICE

For the SRV, Rheonics recommends not changing the default density, but keeping it at 1 g/cc independent of the actual fluid density. Changing the reference density is only necessary when the absolute value of dynamic or kinematic viscosity is needed, the fluid density is known, and the fluid density remains constant over time. For most industrial fluids, this is not the case, as the majority of fluids are non-Newtonian, and their measurements may not agree with those of other viscometers, as measurements are conducted at different shear rates. In most cases, the operator wants to see that the viscosity of the process fluid is constant (for constant processes) or has the same behaviour across multiple batches. This is where the SRV excels. Changing the reference fluid density will only scale the measured viscosity value, not improve the measurement; it has no impact when monitoring the consistency of a fluid or the process.

7.1.2 Density

Density is the mass of a substance per unit volume (e.g., g/cc or kg/m^3). It is a fundamental physical property used extensively in process monitoring and quality control. Density decreases with increasing temperature for most liquids. The SRD measures density directly as a primary quantity. The SRV does not measure density.

Unit	Symbol	Notes
Grams per cubic centimetre	g/cm^3	Most common for liquids
Kilograms per cubic metre	kg/m^3	SI base unit
Pounds per cubic foot	lb/ft^3	US / imperial applications
Specific Gravity	SG	Ratio relative to water at 4 °C
API Gravity	°API	Petroleum / crude oil
Degrees Baumé	°Bé	Acids, sugar solutions, battery electrolytes

Table 18: Density units supported by the SRD

7.1.3 Temperature

Temperature is measured inline using a Pt1000 RTD located in the sensing element. Because both viscosity and density are strongly temperature-dependent, the real-time temperature reading is used as the input to all mathematical compensation models. A stable and accurate temperature reading is therefore a prerequisite for reliable compensated measurements.

7.2 Derived Fluid Properties

7.2.1 Temperature-Compensated Viscosity

The key objective of viscosity measurement is to assess changes in fluid state or composition over time. Because fluid temperature often fluctuates during process steps, measured values must be compared at a consistent reference temperature – much like in a laboratory with a temperature-controlled instrument – to ensure the data reflects genuine process changes rather than thermal effects. To achieve the same result inline, the SME applies a mathematical model to normalise the live viscosity reading to a user-defined reference temperature T_{ref}. This normalization is essential for effective quality control and for calculating derived values, such as concentration.

NOTICE

Temperature compensation is extremely important for fluids with strong temperature dependence. Typical mineral oils show a viscosity change of 2–8% per °C, whereas water-based fluids tend to have lower temperature dependence.

Multiple models are available in the RCP, three common ones are: Exponential, Polynomial, and Arrhenius, each suited to different fluid types and temperature ranges.

All models use the coefficients X_1 and X_2. These coefficients can be obtained by plotting the experimentally obtained data in e.g. Excel using the provided definitions for the x-axis and y-axis and applying a linear regression (linear model with X_1 being the intercept and X_2 the slope). A detailed example is shown in section 7.3. When only one coefficient is required, calculate the mean as instructed.

The terminology is as follows:

- η_L: Line viscosity (viscosity measurement provided by SRV or SRD)
- X_1, X_2: Model coefficients
- T_{ref}: Reference temperature
- T_L: Line temperature
- η_{ref}: Line viscosity at T_{ref}
- n: Total number of calibration data points
- k: Index of each calibration data point ($k = 1, 2, \ldots, n$)

	Description
Formula	$\eta_{comp} = \eta_L \cdot X_1 \cdot e^{X_2 \cdot (T_{ref} - T_L)}$
Coefficients	$X_1, \quad X_2$
Fluid behaviour	Exponential viscosity-temperature trend
Typical applications	Bromine, acetone, bromoform, pentane, bromobenzene
Coefficient fitting	Set $X_1 = 1$. $X_2 = \frac{1}{n} \sum_{k=1}^{n} \frac{\ln\left(\frac{\eta_{ref}}{\eta_k}\right)}{T_k - T_{ref}}$ with η_k, T_k measured at each calibration point
Temperature unit	℃

Table 19: Viscosity temperature compensation models – Exponential Model

	Description
Formula	$\eta_{comp} = \eta_L \cdot \left[1 + A(T_{ref} - T_L) + B(T_{ref} - T_L)^2\right]$
Coefficients	$A, \quad B$
Fluid behaviour	Curved, non-exponential trend
Typical applications	Heavy oils, wide temperature ranges, molten salts
Coefficient fitting	Plot $x = T - T_{ref}, \quad y = \ln\left(\frac{\eta}{\eta_{ref}}\right)$; obtain A, B by linear regression
Temperature unit	℃

Table 20: Viscosity temperature compensation models – Polynomial Model

	Description
Formula	$\eta_{comp} = \eta_L \cdot e^{\frac{X_2}{T_{ref}+273.15} - \frac{X_2}{T_L+273.15}} + X_1$
Coefficients	$X_1, \quad X_2$
Fluid behaviour	Thermally activated Newtonian flow
Typical applications	Pure liquids, solvents, binary mixtures, pharma, lubricating oils, resins
Coefficient fitting	Set $X_1 = 0$. $X_2 = \frac{1}{n} \sum_{k=1}^{n} \frac{\ln\left(\frac{\eta_{ref}}{\eta_k}\right)}{\frac{1}{T_{ref}+273.15} - \frac{1}{T_k+273.15}}$ with η_k, T_k measured at each calibration point
Temperature unit	℃

Table 21: Viscosity temperature compensation models – Arrhenius Model

7.2.2 Temperature-Compensated Density

Density varies with temperature. Compensation models normalise the live density reading to a fixed reference temperature T_{ref}, ensuring the output reflects true fluid properties. Three models are available: Linear, Polynomial, and ASTM.

All models use the coefficients X_1 and X_2. These coefficients can be obtained by plotting the experimentally obtained data in e.g. Excel using the provided definitions for the x-axis and y-axis and applying a linear regression (linear model with X_1 being the intercept and X_2 the slope). A detailed example is shown in section 7.3. When only one coefficient is required, calculate the mean as instructed.

The terminology is as follows:

- ρ_L: Line density (density measurement provided by the SRD)

- A, B: Model coefficients
- T_{ref}: Reference temperature
- ρ_{ref}: Line density at T_{ref}
- n: Total number of calibration data points
- k: Index of each calibration data point ($k = 1, 2, \ldots, n$)

	Description
Formula	$\rho_{comp} = \rho_L + A \cdot (T_{ref} - T_L)$
Coefficients	A
Fluid behaviour	Linear density-temperature trend
Typical applications	Common liquids over a limited temperature range
Coefficient fitting	$A = \frac{1}{n} \sum_{k=1}^{n} \frac{\rho_{ref} - \rho_k}{T_{ref} - T_k}$ with ρ_k, T_k measured at each calibration point
Temperature unit	℃

Table 22: Density temperature compensation models – Linear Model

	Description
Formula	$\rho_{comp} = \rho_L + A(T_{ref} - T_L) + B(T_{ref} - T_L)^2$
Coefficients	$A, \quad B$
Fluid behaviour	Curved, non-linear trend
Typical applications	Heavy oils, wide temperature ranges, molten salts
Coefficient fitting	Plot $x = T - T_{ref}, \quad y = \rho_{ref} - \rho$; obtain A, B by linear regression
Temperature unit	℃

Table 23: Density temperature compensation models – Polynomial Model

	Description
Formula	$\rho_{comp} = \rho_L \cdot e^{\{\alpha_{ref} \cdot \Delta T \cdot [1 + 0.8 \cdot \alpha_{ref} \cdot \Delta T]\}}$
	where $\alpha_{ref} = \frac{K_0 + K_1 \cdot \rho_{ref}}{\rho_{ref}^2}$ and $\Delta T = T_L - T_{ref}$
Coefficients	$K_0, \quad K_1$ (from API-ASTM-IP petroleum tables), $\quad \rho_{ref}$
Typical applications	Crude oil, gasolines, kerosenes, fuel oils
Coefficient fitting	K_0 and K_1 are lookup values from ASTM tables — no regression required
Temperature unit	℃

Table 24: Density temperature compensation models – ASTM Model

7.2.3 Concentration Models

Concentration is derived indirectly from the measured density and is only available for the SRD. Compensation ensures the density input is always referenced to T_{ref}, regardless of live process temperature. The available concentration scales are Brix, Plato, Baumé, Specific Gravity, and OIML. Detailed information is found on the Rheonics support portal.[12]

Scale	Definition	Derived from	Typical applications

[12] https://support.rheonics.com/en/support/solutions/folders/81000287610

©Rheonics

Degrees Brix	Mass % dissolved sugars; 1 °Brix = 1 g sucrose per 100 g solution	Density, temp.-compensated to 20 °C	Juices, soft drinks, syrups, sugar refining
Degrees Plato	Mass % dissolved extract in aqueous solution; calibration differs from Brix	Density, temp.-compensated to 20 °C	Beer brewing, wort concentration
Degrees Baumé	Empirical scale: heavy or light variants depending on whether fluid is denser or lighter than water	Via SG formula	Acids, brines, battery electrolytes
Specific Gravity	Dimensionless ratio of fluid density to reference fluid density	$\mathrm{SG} = \rho_{fluid}/\rho_{ref}$	Petroleum, general industries
OIML (% vol. alcohol)	Volume of ethanol per 100 volumes of mixture at 20 °C per OIML R22	Density, OIML tables	Spirits, wine, ethanol production

Table 25: Concentration scales and models

7.3 Worked Examples

The following examples illustrate the end-to-end workflow for applying a compensation model: collecting process data, fitting coefficients, and loading the configuration into the SME via RCP.

7.3.1 Example — Density Temperature Compensation

This example shows how to apply a density temperature compensation model for water at a reference temperature of 20 °C:

$$T_{ref} = 20\,^{\circ}\mathrm{C}, \quad \rho_{ref} = 0.9982067$$

Step 1 — Collect density-temperature data. Measure density at several temperatures spanning — and exceeding — the expected operational range. Rheonics recommends at least one data point more than the degrees of freedom of the model: 2 or more points for a single coefficient, 3 or more for 2 coefficients.

$$T_1 = 10\,^{\circ}\mathrm{C},\ \rho_1 = 0.9997, \quad T_2 = 15\,^{\circ}\mathrm{C},\ \rho_2 = 0.9991026, \quad T_3 = 25\,^{\circ}\mathrm{C},\ \rho_3 = 0.997047,$$

$$T_4 = 30\,^{\circ}\mathrm{C},\ \rho_4 = 0.9956488, \quad T_5 = 35\,^{\circ}\mathrm{C},\ \rho_5 = 0.9940326$$

NOTICE

The temperature range of the collected data must be larger than the operational temperature range of the process. Applying the model outside its input range is an extrapolation and can introduce systematic errors, particularly for higher-order polynomial models.

Step 2 — Create 2 plots:

- Plot 1: ρ vs. temperature — we want to check the trend and see if there are any outliers, i.e. typos. Once you have the coefficients A and B calculated, plot ρ_{comp}, which should be a straight line intersecting with T_{ref}, ρ_{ref}.
- Plot 2: calculate the x and y axis values as stated in Table 22. In this case: x-axis: $T - T_{ref}$, y-axis: $\rho_{ref} - \rho$

Compute $\rho_{ref} - \rho_k$ and $T - T_{ref}$ for each data point and plot them (Figure 18). Apply a linear regression (e.g. in Excel or MATLAB) to obtain coefficients A and B. In case the linear density compensation is used, the A-coefficient can be calculated according to Equation 2:

$$A = \frac{1}{n} \sum_{k=1}^{n} \frac{\rho_{ref} - \rho_k}{T_{ref} - T_k} = -2.04 \times 10^{-4} \tag{2}$$

For quadratic correction, perform linear regression in e.g. Excel. Expected results are:

$$A = 2.278 \times 10^{-4}, \quad B = 3.477 \times 10^{-4}$$

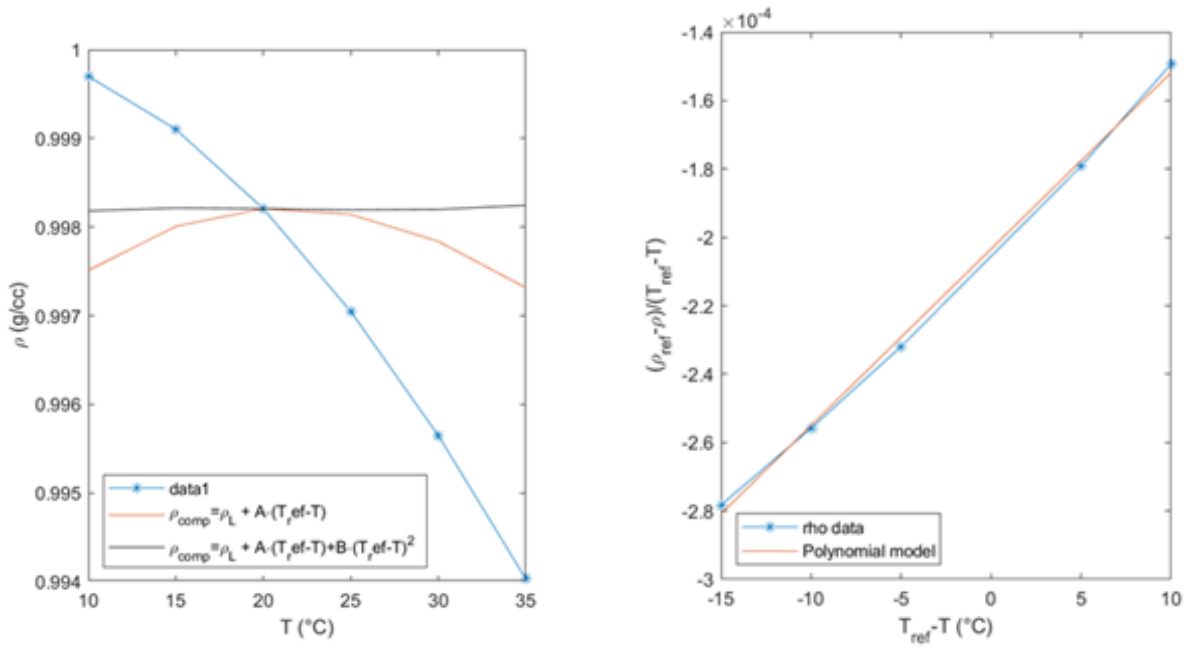

(a) Measured density vs. temperature for water, with linear and polynomial compensation models overlaid, both intersecting near $T_{ref} = 20\,°$C, $\rho_{ref} \approx 0.9982$ g/cm^3.

(b) Linear regression to determine polynomial model coefficients, plotting $(\rho_{ref} - \rho)/(T_{ref} - T)$ against $(T_{ref} - T)$, showing measured data closely following the fitted model.

Figure 18: Density temperature compensation example for water.

Guide, which model to choose:

- Use a linear model when the operational temperature range may extend beyond the range of the collected data. Linear models extrapolate more predictably.
- Use a quadratic model only when 3 or more measurements are available, and the curvature is clearly visible in the residual plot.

Step 3 — Load into RCP. In the Calculation tab, select ① Density, then ② Density Linear Model (for linear correction) or Density Polynomial Model (for quadratic correction). Enter the calculated coefficient A in field ③, and the reference temperature T_{ref} in field ④. For the polynomial model, also enter coefficient B in the field immediately to the right of A. Click ⑤ Upload Model to apply the configuration. The ⑥ Load Configuration and ⑦ Calculation History buttons can be used to recall a previously saved model or review past calculations, respectively. Refer to the RCP Software Manual (RCP-SM) for detailed instructions.

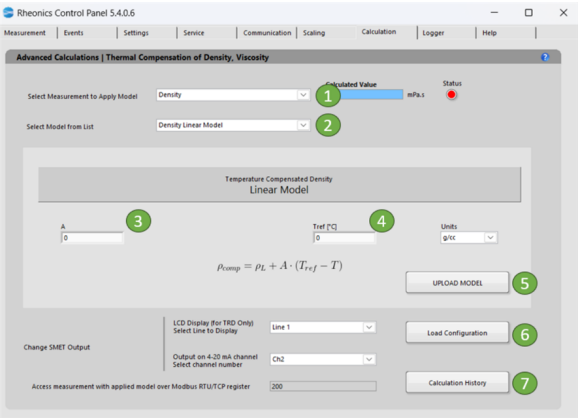

(a) Density Linear Model – RCP Software

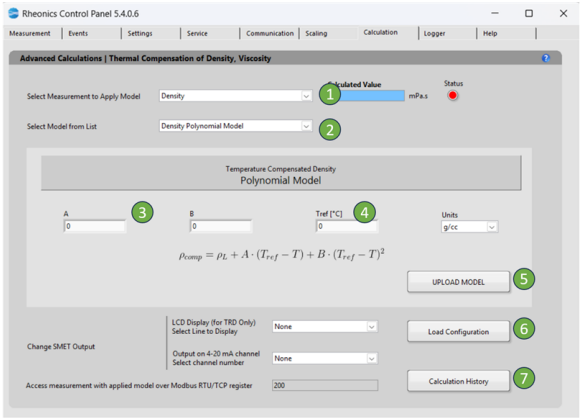

(b) Density Polynomial Model – RCP Software

Figure 19: Density temperature compensation model configuration in RCP

7.4 Cup-Second Conversion

Flow cups are the industry standard in many industries using slurries or inks. The cup seconds measurement is a measure of the fluid's viscosity performed at a relatively low shear rate compared to the SRV or SRD. Though conversion tables from cup seconds to dynamic viscosity exist, they don't apply due to the mismatch in measurement conditions, i.e., vastly different shear rate.

If conversions are used, they have to be established empirically by the operator. Rheonics recommends not converting the viscosity reading to cup seconds. In our experience, it is better to measure the fluids at the target viscosity (measured by the SRV or SRD) and set this viscosity as a target value for the SRV/SRD. This target viscosity can be used for automated viscosity control using the SRV or SRD instead of the manual cup seconds measurement.

7.5 Accessing Measurement Parameters

7.5.1 Rheonics Control Panel (RCP)

The RCP software provides full access to all primary and derived measurement parameters. Parameters are selectable for display on the Measurement Tab and can be logged to CSV for offline analysis. The Calculation Tab is used to configure derived measurement models, upload coefficient sets to the SME, and verify correct operation after upload. For more information, consult the RCP manual.

7.5.2 SME Display (option E1)

When the sensor is ordered with the integrated SME-TRD display, up to three parameter values can be shown simultaneously on the LCD. The parameters assigned to each display line are configured in the Communication Tab of the RCP.

7.5.3 Fieldbus and Analog Outputs

All measurement parameters are accessible via the fieldbus interfaces supported by the SME (Modbus RTU/TCP, HART, PROFINET, EtherNet/IP, and others available on request). Analog (4–20 mA) outputs are scaled and assigned to specific parameters through the RCP. For more information visit at .[13]

[13] https://support.rheonics.com/

8 Installation

This chapter describes the mandatory and suggested installation considerations for optimal operation of the SRD probe. Installation can be done in pipes, tanks, trays, mixers, movable objects, or in offline static conditions. Sensor probes with hygienic certificates (3-A and EHEDG) have additional installation requirements for compliance with the standard. Refer to section 8.4.1.

8.1 Installation Requirement

As described in chapter 6, SRD sensor operates by the Rheonics Balanced Torsional Resonator - BTR technology. The SRD sensor measures whatever is in contact with the sensing element as well as its immediate surrounding area.
The red marked zone in figure 20 must be free of obstructions. Obstructions within this zone, may affect the calibration, stability of the SRD reading.

Figure 20: SRD sensing area

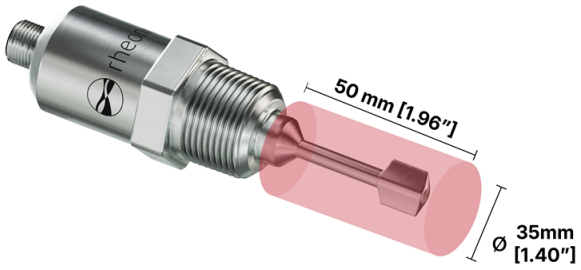

NOTICE

The full sensing area must be exposed to the fluid. Stagnation zones, incomplete wetting or deposits can affect the measurement and are highly recommended to be avoided.

8.2 Installation: Flow-Orientation

For installation in pipes, two orientations can be distinguished, these are Perpendicular and Parallel orientations, as shown in figure 22. For Newtonian fluids up to a viscosity of approx. $1000mPa \cdot s$ without bubbles, particles, fibres or the tendency to build deposits, both parallel and perpendicular orientation work equally well. For more challenging fluids, such as strongly non-Newtonian fluids (e.g. chocolate), fluids with particles($\geq 20\mu m$), fibres ($\geq 1mm$), high flow velocities ($\geq 2^m/_s$), parallel installation is highly recommended.

Depending on the type of fluid, high-speed mixing processes or installations near pumps may add bubbles or air to the fluid, which can add noise to the SRD readings. If bubbles are expected in the fluid, contact Rheonics Team for further recommendations and solutions.
Four main requirements for installation of the SRD are given below:

1. **Ensure the whole sensing area is in contact with the fluid of interest**
   Rheonics SRD sensor probe has a sensing element that is surrounded by the sensing area highlighted in red in figure 20. The SRD sensing area must be fully in contact with the fluid of interest, partial immersion must be avoided. This sensing area is the same across all variants of SRD probes. This allows repeatable and reproducible readings of density and viscosity for the same fluid and operating conditions, regardless of the probe variant (flush, short, long, slimline, reactor, etc.) or installation.

2. **Avoid stagnation or dead zones in the sensing area**
   Any zone prone to deposits or the presence of other fluids different from the one of interest (e.g.

accumulation of deposits, bubbles, etc.) should be avoided within the sensing area. Dead zones susceptible to fluid plugging/deposit/sedimentation are common near the installation ports of tanks and pipes. It is important to ensure that the sensing area is away from stagnation or dead zones. A good solution against this is to immerse the probe further in the fluid with a long insertion probe variant or use a flush installation (dead zones are removed).

3. **Probe tip orientation to the flow**
   This is relevant only for Perpendicular installation orientation. SRD sensor probe's fluid end or tip has a pallet shape. For perpendicular installations, Rheonics recommends aligning the SRD sensor probe tip to the fluid flow, as detailed in 24b. This avoids possible recirculation zones that can lead to sedimentation behind the tip (shadow section). This is also a requirement for hygienic installations. Learn more here[14].

4. **Thermal balance for highest accuracy**
   Figure 21 shows the inner resonator of the SRD sensor probe. To ensure the highest accuracy in density and viscosity measurements, the resonator should be thermally balanced. This means that if the fluid's temperature and ambient temperature (back side of probe) differ by more than 15 ℃, a long insertion SRD is recommended to place the resonator completely in fluid and maintain expected accuracy. Learn more here[15].

Figure 22 shows correct and incorrect examples of installations of the SRD sensor probe in pipes.

- a) Small Diameter Lines (2", DN50, or smaller): Because the SRD sensor probe has a 35 mm diameter sensing area, small pipes can cause "wall effect" interference. For these sizes, use a parallel installation or a Rheonics accessory (e.g., flow cell or spool piece) to ensure accurate performance.
- b) Perpendicular Installation: Avoid using long standpipes that place the sensing area in a "dead zone" (stagnant flow). To fix this, either reduce the standpipe height or use a Long Insertion Probe (e.g., SRD-X5) to reach the active flow.
- c) Incorrect Parallel/Axial Installation: Do not use a long standpipe in parallel or axial configurations. This clearly places the sensing area partially or fully in a dead zone, which is not recommended.
- d) Improved Parallel Installation: If using a short probe in a parallel configuration, minimize the standpipe length to ensure the sensor is exposed to the process fluid.
- e) Optimal Installation (High Viscosity): For high-viscosity fluids, use a Long Insertion Probe (e.g., SRD-X5). This bypasses the dead zone and positions the sensing area directly in the straight section of the pipe for maximum accuracy.

Figure 21: SRD Long insertion probe for thermal balance.

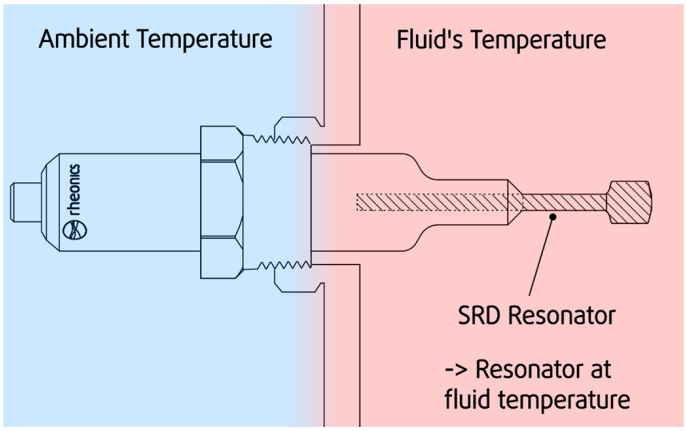

[14] https://rheonics.com/support/srd-end-orientation
[15] https://rheonics.com/support/srd-temperature-balance

Figure 22: SRD Perpendicular and parallel installation orientations.

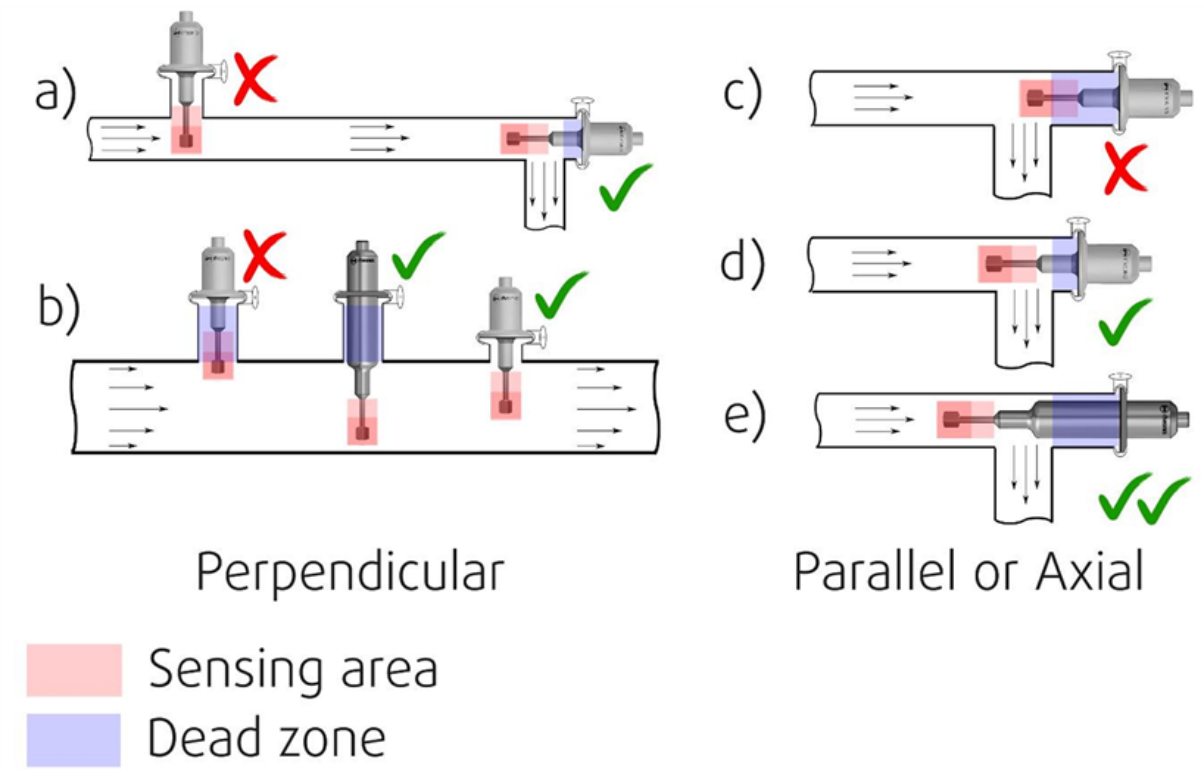

8.3 Additional installation notes

- SRD probe can be installed in lines as small as ¾" / DN20 using Rheonics accessories like flow cells (Section 9). All SRD flow cells can be found online here[16].
- There are no requirements on distance clearance upstream or downstream from the SRD probe, or pipe diameters of straight flow before and after the probe, to external equipment or instrumentation, i.e. valves, elbows, etc. Installation will be correct, as long as the sensing area is unobstructed and in contact with the fluid of interest.
- Consider that a clearance of 12 mm is needed from the sensor probe tip to any external equipment or pipe wall. This distance is considered in the sensing area.
- Temperature uniformity and stability in the area of the sensing element are key for density and viscosity accuracy.
- SRD sensor can operate in fluids with solids in the range of microns. Particles in the range of millimeters and centimeters will disrupt the readings (i.e. create spikes in readings) when the solids come in contact with the probe. If particles can harm the probe, it is recommended to use filters in pipes, probe protection sleeves in vessels (not recommended for high-viscosity fluids), or reduce or eliminate the presence of solids completely. SRD is not recommended for fluids with particles like gravels as these can harm the probe.
- SRD sensor is generally not recommended for fluids with a high percentage of bubbles or entrapped air, and not suitable for foam. In these cases, contact Rheonics Support Team for assistance.
- SRD operates in static and flowing fluids. In both cases, density measurements should be the same under the same temperature and pressure conditions. Even though flow rates do not influence the sensor operation, the viscosity measurement of a non-Newtonian fluid is dependent on the fluid's flow rate. A consistent flow rate in line for non-Newtonian fluids is recommended for low noise and stable readings. For Newtonian fluids, viscosity is not dependent on flow rate.

[16] https://rheonics.com/support/srd-flow-cells

- External vibrations do not affect the sensor's operational performance. However, in high vibration environments, the sensor reliability and lifetime can be compromised; therefore, regular checks are advised.

8.4 Hygienic installation

8.4.1 Hygienic installation for 3-A and EHEDG

The Type SR sensor must be installed according to the requirements given in EHEDG Guidelines 8[17], 10[18] and 37[19]. That is to install the sensor according to the following guidelines:

1. Sensor must be mounted in a self-draining orientation

2. In tanks, the sensor must be positioned to be directly accessible and wetted for cleaning and be installed flush to the process area

3. For tee piece installations, the ratio between upstand (L) and the diameter(D-d) shall be: $(D-d)/L \geq 1$, (see figure 23a)

4. For welded adapters, the food contact surface must be smooth and the welding done according to EHEDG guideline 9[20] and 35[21].

5. Suitable pipe couplings and process connections with applicable gaskets must be applied according to the EHEDG position paper. Rheonics supports:

   - DIN11853-1/2/3
   - DIN11864-1/2/3
   - DIN 11851 in combination with ASEPTO-STAR k-flex upgrade gaskets
   - ISO 2852, DIN 32676, BS 4825 Part 3 in combination with Tri-Clamp seals
   - ISO 2853, BS 4825 Part 4 in combination with T-seals
   - VARINLINE® tank flange type T and P with EPDM O-Ring in size B,F,N,G

6. The sensor probe has been developed for cleaning in place (CIP) applications and does not need to be dismantled for cleaning.

[17] EHEDG Guideline: Doc 8: Hygienic design principles
[18] EHEDG Guideline: Doc 10: hygienic design of closed equipment for processing of liquid food
[19] EHEDG Guideline: Doc 37: Hygienic design and applications of sensors
[20] EHEDG Guideline: Doc 9: Welding stainless steel to meet hygienic requirements
[21] EHEDG Guideline: Doc 35: Hygienic welding of stainless steel tubing in the food process industry

Figure 23: Installation according to EHEDG

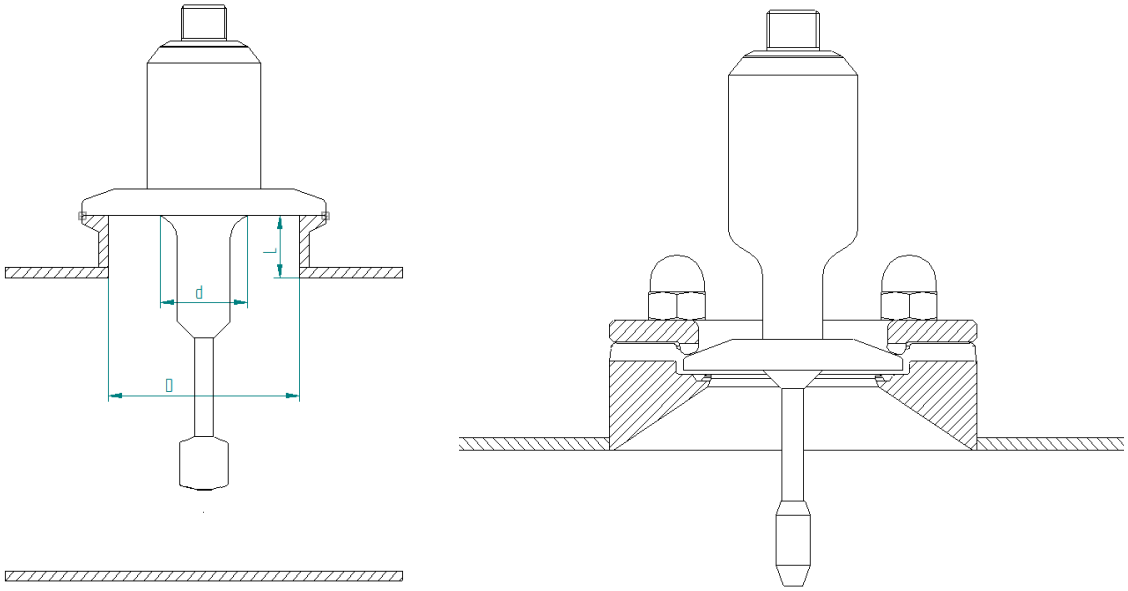

(a) Example of an installation in a Tee piece. the ratio between upstand (L) and the diameter(D-d) shall be (D-d)/L≥ 1

(b) Example of an installation on a tank using flush sensor design with a flush type weld-on connector.

©Rheonics

7. The flow around the SRD tip must be parallel, axial or anything between the two (angle “a” in figure 24b, $0° \leq a \leq 90°$). Perpendicular flow must be avoided because it hinders the cleaning process, as shown in figure 24b.
   The SRD-tip is not visible post installation. To ensure the correct orientation of the tip, there is a black dot on the M12 connector indicating the long axis of the SRD-tip (figure 24a).

Figure 24: Installation according to EHEDG

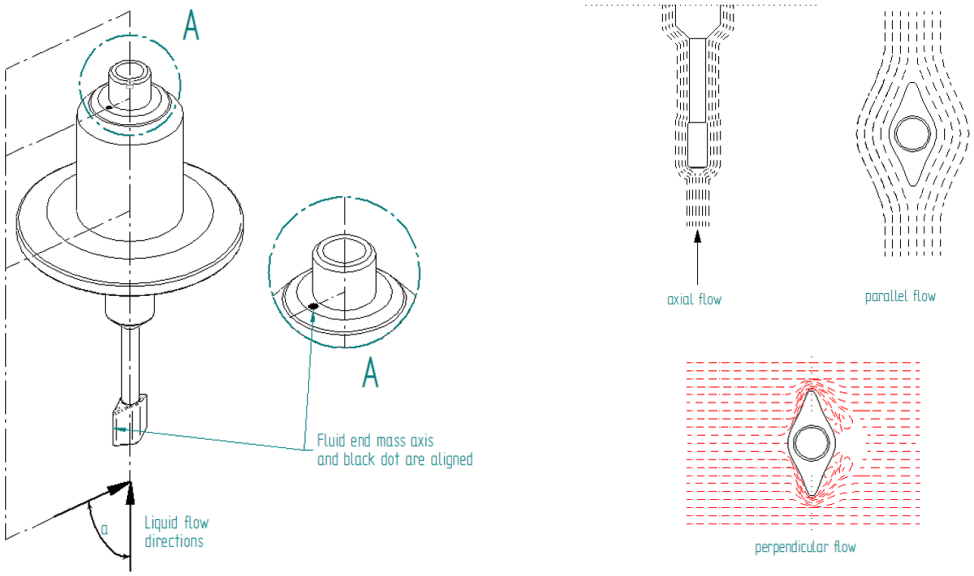

(a) The black dot on the M12 connector indicates the long axis on the SRD tip for proper installation. Angle “a”, $0° \geq a \geq 90°$.

(b) Permitted flow patterns are parallel flow and axial flow, or any flow direction between the two. Perpendicular flow patterns are not permitted because the recirculation zones hinders cleaning.

8.4.2 HAW-12G-OTK

The HAW-12G-OTK must only be used with the SRD-X1-12G. For 3-A and EHEDG compliance:

1. The sensor must be installed as described before in section 8.4.1
2. Welds must be executed according to EHEDG guideline No. 9[22]
3. Surface roughness of the weld must be below Ra 0.8
4. The inspection hole (1) must be at the lowest possible point
5. HAW-12G-OTK must only be used in conjunction with
   - HAW-OR-FKM (EHEDG and 3-A)
   - HAW OR-EPDM (only 3-A)
6. To ensure an optimal tight seal, the o-ring shall be replaced each time the instrument is removed. Otherwise, the o-ring is recommended to be changed in 3-month intervals
7. The sensor must be screwed in until a solid end stop is reached and the o-ring is fully compressed. Rheonics recommends a torque of 15Nm.

Figure 25: Example of installation in HAW-12G-OTK

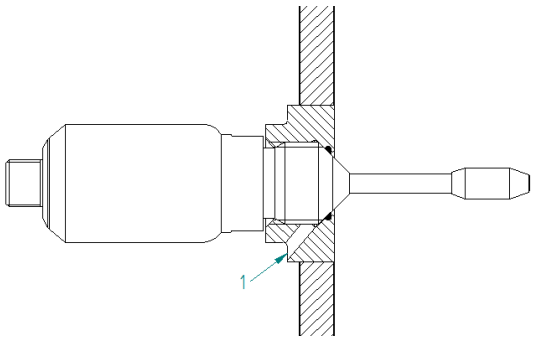

8.5 High-Temperature Installations

The SRD sensor probe is available in several temperature classes to accommodate process temperatures significantly above the temperature limits of the sensor cable and its connector. The process temperature can be much higher than the rated cable temperature; the critical constraint is keeping the cable connector within its temperature rating. The following considerations are essential for a safe and reliable high-temperature installation.

Temperature rating is independent of operating state The rated maximum temperature applies to the sensor probe at all times, regardless of whether the sensor is powered and measuring or in a de-energised standby or maintenance state. The probe must not be exposed to temperatures exceeding its rated limit under any condition, including process startup, cleaning, and CIP/SIP cycles, when elevated temperatures are frequently applied to a temporarily unpowered probe.

Temperature rating applies to the entire probe, not the sensor cable connection The probe temperature rating covers the probe body and process connection up to and including the M12 connector on the probe. It does not extend to the sensor cable itself. The standard Rheonics sensor cables are rated to a maximum of 90°C (194°F) for the standard PUR cable, and up to 150°C (302°F) for the high-temperature PTFE cable (CAB-HT). Even when a high-temperature cable is used, the cable and its connector must never be exposed to temperatures exceeding their respective rating. Exceeding the temperature rating of the cable connection will damage the cable. The sensor probe itself is not affected, provided the cable connector does not leave any residue inside the M12 connector of the probe.

[22] EHEDG Guideline: Doc 9: Welding stainless steel to meet hygienic requirements

NOTICE

Select the sensor cable variant based on the actual ambient temperature at the cable connection point, not on the process temperature. For high-temperature applications, always order the HT cable (CAB-HT) and verify the ambient temperature at the M12 connector before installation.

Probe insertion length must be specified at order time to protect the cable connection

In high-temperature installations the portion of the probe between the process connection and the M12 cable connector is exposed to a temperature gradient between the hot process and the ambient environment. For the cable connector to remain below its maximum temperature rating, a sufficient length of the probe must protrude beyond the insulation so that the connector reaches ambient temperature conditions. This is illustrated in Figure 26.

The required protrusion length depends on the process temperature, the ambient temperature, the thermal conductivity of the probe material, the insulation thickness, and the thermal boundary conditions at the installation point. It must be calculated or estimated before ordering and cannot be adjusted in the field after delivery. If the insertion length is specified incorrectly, the cable connector may be permanently damaged by overheating.

Figure 26: Schematic of probe protrusion requirement in a high-temperature installation. The protrusion length L-A must be sufficient to bring the M12 connector to ambient temperature.

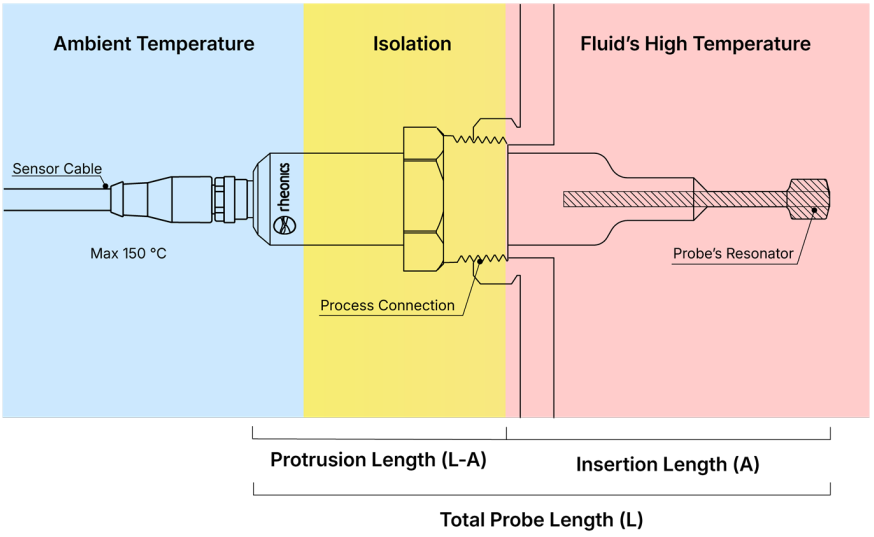

NOTICE

Specifying insufficient probe protrusion length in high-temperature installations can permanently damage the sensor cable and M12 connector. This damage is not covered under warranty. Contact the Rheonics Sales Team to verify the required protrusion length before placing the order.

For high-temperature applications requiring insertion lengths beyond the standard short probe variants, the long-insertion variants (X5, X6) allow the process connection to be set deep within the process while the probe back end protrudes into the ambient environment. Refer to sections 5.1.7 and 8.1 and consult the Rheonics Sales Team for the appropriate variant and insertion length specification.

8.6 Corrosive and Erosive Fluid Installations

Selecting the correct wetted material is the most important decision for installations in corrosive or erosive process fluids. Corrosion results from chemical attack by the process fluid on the probe material; erosion results from the mechanical removal of surface material by abrasive particles or high-velocity flow. Both mechanisms lead progressively to surface degradation of the sensing element, with severe consequences for the pressure integrity and measurement accuracy of the probe.

Material selection The standard wetted material of the SRV and SRD sensing element and process connection is Stainless Steel 316L (1.4404/1.4435). This is an austenitic chromium-nickel-molybdenum alloy with good general corrosion resistance, suitable for the majority of industrial fluids. For aggressive chemical environments—including chloride-bearing fluids, strong acids (HCl, H_2SO_4, HNO_3), and oxidising fluids—Stainless Steel 316L is not compatible and the Hastelloy-C22 (2.4602/2.4607) wetted variant must be selected. Hastelloy-C22 is a nickel-chromium-molybdenum alloy with a Pitting Resistance Equivalent Number (PREN) of 46 and excellent resistance to a wide range of corrosive media. Table 26 shows some examples; note that compatibility also depends on process temperature and concentration during operation, which will affect the corrosion resistance.

Fluid / Chemical Environment	SS 316L (1.4404)	Hastelloy C22 (2.4602)
Chloride fluids ($CaCl_2$, $FeCl_3$, etc.)	Not compatible	Compatible
Hydrochloric acid (HCl)	Not compatible	Compatible
Sulfuric acid (H_2SO_4)	Not compatible	Compatible
Nitric acid (HNO_3)	Not compatible	Compatible
Oxidising fluids	Not compatible	Compatible
Organic solvents, oils, hydrocarbons	Compatible	Compatible
Dilute bases (NaOH $<$ 10%)	Generally compatible	Compatible
Water, brine (low chloride)	Compatible	Compatible

Table 26: Indicative chemical compatibility of SRV/SRD wetted materials. Compatibility depends on temperature and concentration. The material compatibility is the responsibility of the operator.

The back end of the probe, including the M12 connector, is always Stainless Steel 316L regardless of the ordered wetted material. The transition between Hastelloy-C22 and 316L occurs before the process connection. Verify chemical compatibility for both materials if the back end is also exposed to the process fluid or cleaning agents.

⚠ NOTICE

Rheonics does not provide chemical compatibility testing for customer-specific fluids. It is the responsibility of the operator to verify the compatibility of all wetted materials with the process fluid, cleaning agents, and sterilising media.

PTFE coating does not provide corrosion protection

The optional PTFE coating [TF] is designed to reduce deposit formation and improve cleanability. The coating contains pinholes and is not a barrier against chemical attack on the underlying substrate. It must not be specified as a substitute for selecting a chemically compatible base material. Selecting a PTFE-coated 316L probe for a fluid that attacks 316L will result in corrosion of the substrate wherever the coating is damaged or discontinuous.

Effect of corrosion and erosion on pressure rating The pressure rating of the SRV and SRD probe (see section 5.1.6) is a structural rating based on the intact, as-manufactured geometry and material thickness of the sensing element and process connection. Corrosive and erosive attack reduce the effective wall thickness and cross-sectional area of the sensing element over time. Even moderate material loss can reduce the actual burst and fatigue pressure below the rated value. For moderate

©Rheonics

pressures (below 15 bar) corrosion or erosion generally does not create an immediate pressure hazard as long as the measurement is not significantly affected. At higher pressures, continued operation of a corroded or eroded probe at its original rated pressure is unsafe and must be avoided. Inspect the probe surface regularly in corrosive or abrasive service and replace the probe if significant degradation is observed.

WARNING

An SRV or SRD probe with significant corrosion or erosion damage must not be returned to service at its original pressure rating. Remove the probe from service, inspect it visually, and contact the Rheonics Support Team for evaluation before reinstallation.

Effect of corrosion and erosion on measurement accuracy and calibration. The viscosity measurement of the sensor probe is based on the damping characteristics of the sensing element, which depend critically on its geometry. Corrosive or erosive removal of material from the sensing element surface alters its resonant characteristics, causing a progressive shift in the measured values relative to the factory calibration. This drift can be compensated by software scaling provided the change in surface geometry is minor; overall accuracy may be impaired. Once the surface geometry has changed significantly, the drift is irreversible. In corrosive or abrasive service, the probe will require more frequent calibration verification and earlier replacement compared to standard applications. For highly aggressive fluids, annual or more frequent calibration checks are recommended and the service life of the probe may be substantially shorter than in non-corrosive, non-abrasive applications.

NOTICE

In corrosive or abrasive service, the Rheonics Clean Sensor Status and periodic air checks are the primary tools for detecting surface degradation. A progressive shift in air-check baseline readings is an early indicator that the sensing element geometry has changed and that recalibration or probe replacement is required.

8.6.1 Deposits, particles and fibres

The measurement of the sensor probe is most sensitive to the wetted surface of the sensing element. In case fibres or particles are present in the fluid, there is a risk of deposits on the sensing element, which influence the measurement. In these cases, the measured fluid properties are no longer representative of the process fluid, which is problematic for control.
The formation of deposits or fibres getting stuck on the sensing element can frequently be avoided by choosing the correct installation method. Though Rheonics recommends discussing these process conditions with our Support Team, here are some general guidelines:

- Avoid using any protective cages or protective sleeves.
- Avoid any structures around the sensing element that restrict the flow, especially if dead zones are created.
- Use parallel flow.
- In case of fibres or large particles, where the sensing element needs to be protected, consider using the Stargate with the flow coming from the left, Figure 28.

8.7 High-Pressure Installations

The sensor probe is available in pressure classes up to 1500 bar (20000 psi). Probes have been pressure-tested in accordance with UL 61010-1 and CAN/CSA C22.2 No. 61010-1. While all probe variants share the same sensing element, the pressure rating is determined by the probe variant and process connection geometry, and varies significantly between variants.

Pressure rating varies by probe variant

The short probe variants (X1-X4) with threaded or flanged connections can reach high pressure ratings by virtue of their compact, robust process connection geometry. The long-insertion probe variants (X5, X6) are rated to a maximum of 100 bar (1450 psi) as standard. This limitation arises from the structural constraints of the elongated probe shaft, which must withstand both internal pressure and the bending loads imposed by fluid flow. For high-pressure applications requiring long insertion depths, alternative probe variants must be considered.

Process connection and seal selection

The pressure integrity of the installation depends not only on the probe rating but also on the process connection, seal, and weldolet or flange used to mount the probe. All components in the pressure boundary must be rated for the maximum allowable working pressure (MAWP) of the process, including any pressure spikes during startup, shutdown, or cleaning operations. Threaded connections (NPT, G) require Teflon tape or an appropriate thread sealant and must be fully engaged to the rated thread engagement depth. Flanged connections must use pressure-rated gaskets appropriate for the flange class and process fluid. Flat-face flanges are not recommended above approximately 40 bar (600 psi). Refer to the Rheonics Support Portal for flange norms, ratings, and seal selection guidance: Flange Norms, Ratings and Sizes.

NOTICE

Under typical industrial process conditions, line pressure has a negligible effect on the viscosity and density readings of Rheonics inline sensors. The torsional resonator is mechanically robust, and its measurement principle is largely insensitive to the pressure variations encountered in standard process installations. In practice, no pressure compensation is required in the vast majority of applications. In the rare cases where the process operates at extreme pressures and a correction is needed, a pressure value can be written back to the sensor via the fieldbus interface, allowing the sensor to apply a compensation factor. This requires the operator to have a pressure measurement available in the system, typically from an existing line pressure transmitter, and to configure the corresponding input in the Rheonics Control Panel.

Alternative probe variants for high-pressure long-insertion applications

When a long insertion depth is required at pressures above 100 bar, the SRD-X9 Stargate probe variants are the primary alternative for inline operation. The Stargate is available in low-pressure and high-pressure configurations. For the most demanding pressure applications in oil and gas extraction, upstream and midstream pipelines, and desander equipment, Rheonics offers the Sand Detection Probe (SDP-X9-HPWA), a ruggedised variant of the Stargate platform rated to 20000 psi (1400 bar). The SDP assembly includes the probe, a high-pressure welding adapter (HPWA), and an optional extension tube and customer flange. Contact the Rheonics Sales Team for pressure-specific probe selection and assembly guidance.

8.8 Fluid Forces on the Sensing Element

In most process conditions the fluid exerts negligible mechanical force on the sensing element. Two conditions can produce drag forces large enough to risk permanent damage to the sensing element and must be evaluated before installation:

- **High fluid velocity:** low-viscosity fluids moving at high speed generate pressure-driven drag that scales with fluid density and the square of velocity.
- **High fluid viscosity:** highly viscous fluids moving even at low speed generate viscous shear drag that scales directly with dynamic viscosity and velocity.

Both scenarios are evaluated for a standard perpendicular installation, which represents the worst case for drag loading. The results apply equally to inline pipe and tank wall installations. These limits are valid for solid-free fluids only. If the process fluid contains suspended particles that could strike the sensing element, contact the Rheonics Support Team before installation.

©Rheonics

NOTICE

The limits in this section assume a perpendicular installation. A parallel installation (see section 8.10.2) eliminates bending forces on the sensing element entirely and is always acceptable from a mechanical standpoint.

8.8.1 Force Limits: High Velocity and High Viscosity

High fluid velocity: At high flow speeds the dominant drag is pressure drag, determined by fluid density and velocity. Figure 27a shows the maximum permitted fluid velocity as a function of fluid density for the SRD under perpendicular installation. Operating above this curve risks exceeding the 2 Nm torque limit of the sensing element.

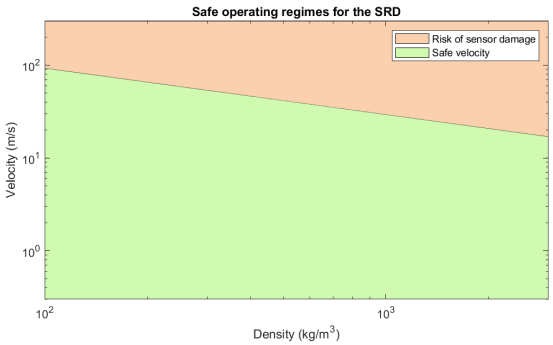

(a) Max. permitted fluid velocity vs.fluid density for the SRD

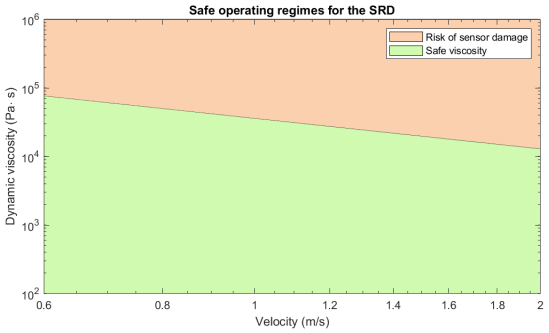

(b) Max. permitted dynamic viscosity vs.fluid velocity for the SRD

Figure 27: Operating limits for the SRD sensing element under perpendicular installation. (a) Maximum permitted fluid velocity as a function of fluid density. (b) Maximum permitted dynamic viscosity as a function of fluid velocity. Operating above either curve risks permanent damage to the sensing element.

High fluid viscosity: Highly viscous fluids typically flow laminarly at low velocities. Here drag is dominated by viscous shear, and the sensing element is rated to a maximum torque of 2 Nm before risk of permanent damage. Figure 27b shows the maximum permitted dynamic viscosity as a function of fluid velocity for the SRD under perpendicular installation.

Figure 27 applies to Newtonian fluids only. For non-Newtonian fluids, the viscous force cannot be calculated using the apparent shear rate; the relevant quantity is the flow-induced shear at the sensing element surface under actual process conditions.

NOTICE

The maximum measurable viscosity depends on the ordered viscosity range (see section 5.1.4). The 2Nm force limit is an independent mechanical constraint that must be assessed separately. It also applies when the sensor is not operating. For tank installations with a rotating mixer, measure the actual fluid velocity at the probe location empirically — it cannot be derived directly from impeller RPM.

8.8.2 Recommended Installation: Parallel Orientation

If process conditions exceed the limits of operation, or if any mechanical risk must be eliminated, a parallel installation must be used. Aligning the probe axis with the flow converts the fluid load from a bending force into a purely axial force, greatly reducing mechanical risk. As a secondary benefit, continuous axial flow promotes self-cleaning and reduces measurement noise for inhomogeneous or highly viscous fluids.

Two configurations achieve parallel orientation:

- **Elbow installation** — the sensor is mounted at a pipe elbow so the sensing element faces directly into the oncoming flow. Long-insertion variants (X5, X6) are recommended to place the sensing element in the straight-flow section beyond the bend. Rheonics FET series elbow tees are designed for this configuration (see section 8.2).
- **Stargate probe variant (X9)** — a specialized probe designed specifically for parallel flow exposure. See section 5.1.7 and section 8.11 for installation directions and pressure ratings.

For further guidance on parallel installations refer to section 8.2 and the Rheonics Support Portal.

NOTICE

It is the responsibility of the operator to ensure that the maximum torque of 2 Nm on the sensing element is not exceeded under any operational conditions, including start-up, cleaning, and maintenance operations.

8.9 Ultra-High-Viscosity & Flow Protection Installations

Even in a parallel installation, certain extreme process conditions require additional precautions. Viscous fluids with a dynamic viscosity above approx. 200 Pa·s (200.000 mPa·s) that are actively pressed against the sensing element can damage the sensing element even under parallel flow conditions. Typical examples are polymer extruders and injection-moulding machines, particularly during the start-up phase when the material has not yet reached its full operating temperature and remains significantly more viscous than at steady state.

For these applications the SRD-X9 Stargate probe variant is the recommended solution. The Stargate can be installed in two orientations relative to the flow direction, each suited to a different operating priority.

When the sensing element faces the oncoming flow, fluid exchange across the sensing surface is maximised, delivering the best measurement quality. This is the preferred orientation whenever the fluid forces are within the limits given in section 8.10.1.

When the base of the Stargate faces the oncoming flow, the sensing element is positioned in the downstream wake of the probe body. This orientation reduces the force on the sensing element considerably and is the proven method for the harshest installations, such as polymer extruders and injection-moulding machines. The base-facing orientation is equally recommended for fluids containing fibres that can become caught on the sensing element, or larger particles that could strike and damage it: the blunt base absorbs the mechanical impact and prevents fibres from attaching to the sensing element.

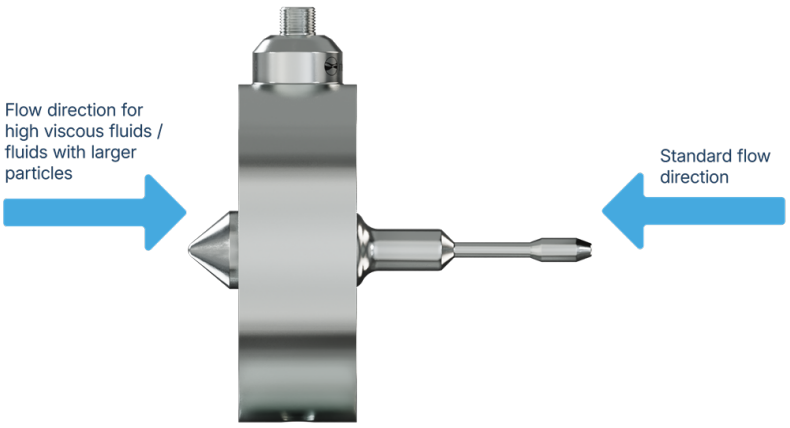

Figure 28: SRV-X9 Stargate installation orientations. Left: sensing element facing the flow for optimal measurement. Right: base facing the flow for maximum force protection in ultra-high-viscosity or particle-laden applications.

NOTICE

The base-facing orientation reduces measurement quality compared to the element-facing orientation due to the reduced fluid exchange across the sensing surface. Use it only when force protection is required. Refer to the Rheonics Support Portal for application-specific guidance.

For all ultra-high-viscosity installations, the force limits of section 8.10.1 and the cleaning recommendations of section 13.5 apply.

9 Sensor Accessories

Proper installation of the SRD sensor probe is essential for achieving accurate, reliable, and reproducible viscosity measurements. Detailed installation requirements are provided in Section 8. This section introduces various Rheonics accessories[23] designed to optimize performance and simplify integration across different applications. Using these accessories ensures full compliance with installation requirements while streamlining the setup process.

NOTICE

Throughout this section, CFD images are used to represent the fluid behaviour or interaction with the sensor probe, especially the sensing element. In these images, the green areas show good fluid exchange, while solid red areas show stagnation zones, boundaries or dead zones, where fluid exchange is limited. Placing the sensing element in red areas lead to measurement of static fluid and thus to inaccurate readings as the static fluid properties of non-Newtonian can be vastly different compared to when the fluid is in motion.

9.1 Weldolets

Weldolets are typically used for perpendicular installation (see section 8.2) of the sensor probe in pipes or tanks. Standard off-the-shelf weldolets or ferrules are compatible but frequently cause stagnation zones in the sensing area (see figure 29a). Depending on the nature of the fluid, the stagnation zone may cause a slow response time, deposit formation or unstable readings, especially for non-Newtonian fluids. To improve the flow conditions around the sensing element, the immersion depth must be sufficiently large. Figure 29b shows such conditions. A deeper immersion can be achieved by using a longer or custom sensor probe, or a shorter weldolet, where the latter is frequently the more economical option. When installing the sensor probe perpendicular to the flow, there is always a small stagnation zone behind the sensing element. For most fluids, this isn't an issue. For complex fluids, these stagnation zones are problematic, and a parallel installation is required.

Figure 29: Rheonics SRD perpendicular installation. Red: Stagnation zones. Green: Good flow for measurement

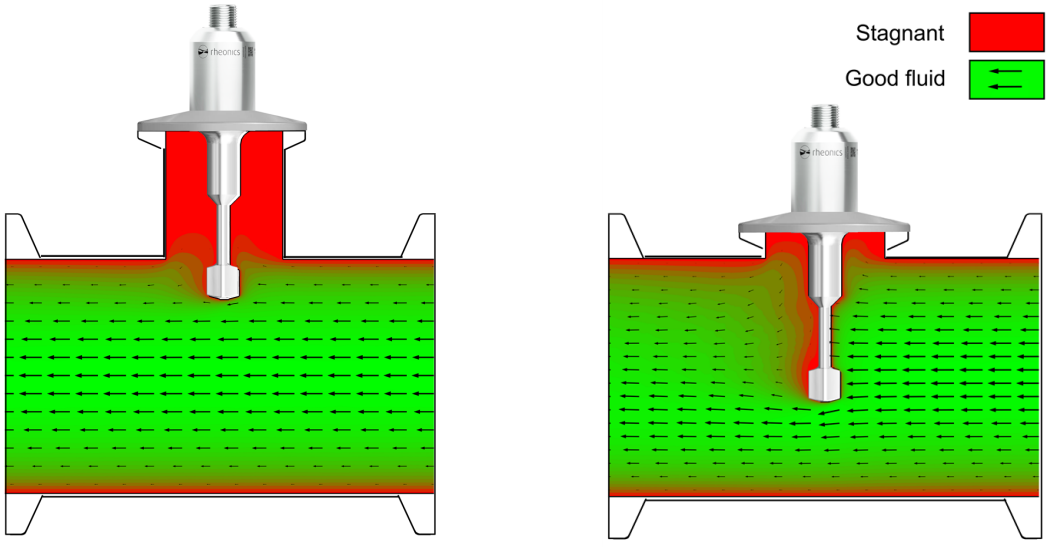

(a) Stagnation zones around the sensing element due to insufficient immersion depth

(b) Good flow conditions around the sensing element

[23] None of sensor accessory are evaluated by UL

©Rheonics

Figure 30 shows 3 variants of Rheonics weldolets/ferrules, designed for optimal flow conditions around the SRD sensing element:

- The WOL-34NS is a $^3/_4$" NPT threaded weldolet suited for sensor probe variant SRD-X1-34N.
- HAW-12G-OTK is a G $^1/_2$" threaded hygienic weldolet with 3-A and EHEDG certification available. It is suited for sensor probe variant SRD-X1-12G and uses an o-ring seal.
- WFT-15T is a Tri-Clamp ferrule with a shorter height to avoid dead zones in installation. It is compatible with SRD-X3-B15T.

The key advantage of Rheonics weldolets is the shorter height, which allows the correct immersion of the sensor probe's sensing element in the active fluid, avoiding dead zones created by the installation port or standpipes.
Figure 31 shows overall dimensions of the main weldolets. Learn more on SRD accessories weldolet type. [24]

Figure 30: Weldolet accessories for SRD



(a) WOL-34NS

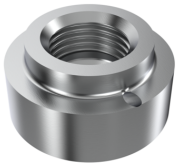

(b) HAW-12G-OTK. EHEDG/3-A Certified



(c) WFT-15T

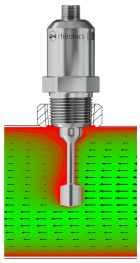

(d) WOL-34NS fluid interaction

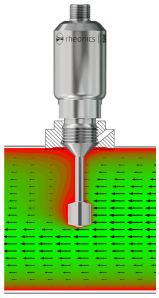

(e) HAW-12G-OTK fluid interaction

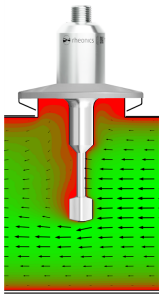

(f) WFT-15T-26A fluid interaction

Figure 31: Weldolet drawings - Units: mm [in]

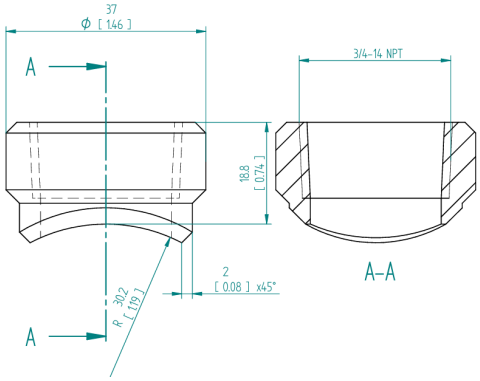

(a) WOL-34NS for SRD Variant: X1-34N

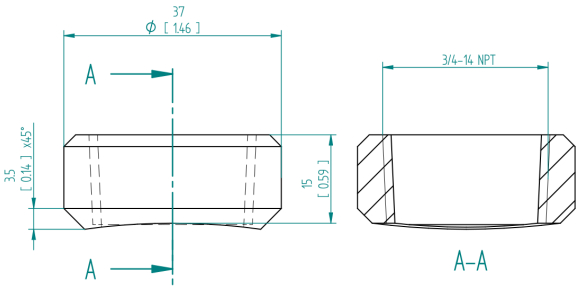

(b) WOL-34NL for SRD Variant: X1-34N

[24] rheonics.com/accessories-srd-weldolet

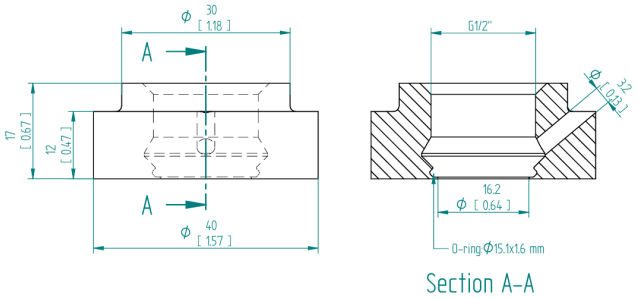

(c) HAW-12G-OTK for SRD Variant: X1-12G

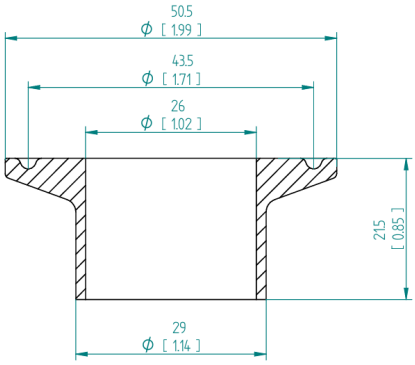

(d) WFT-15T-26A for SRD Variant: X3-B15T

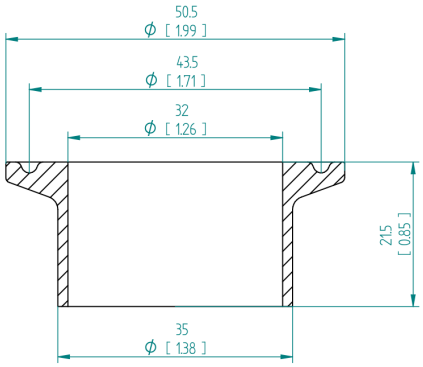

(e) WFT-15T-32A for SRD Variant: X3-B15T

©Rheonics

9.2 Flow Cells

Rheonics flow cells allow the simple integration of standard Type-SR sensor probes into process pipelines, maintaining optimal flow conditions around them. A uniform flow around the sensing element is critical for a reliable and stable measurement. Using standard, off-the-shelf e.g. tee pieces, frequently leads to stagnation zones around the sensing element as shown in Figure 32a, which must be avoided. For a reliable, stable measurement, the sensing element must be fully exposed to the flow. Figure 32b illustrates the minimum required insertion depth for most fluids. For more complex fluids (such as chocolate), longer probes need to be used to expose the sensing element to a uniform, flow induced shear rate as shown in Figure 32c.

Figure 32: Sensor probe installation in flow cell. Red: Stagnation zones. Green: Good flow for measurement.

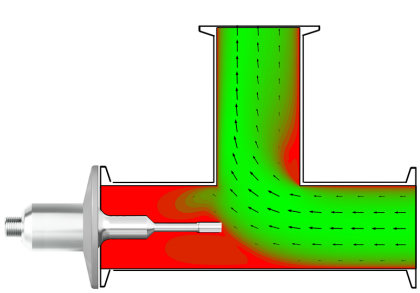

(a) Stagnation zones around the sensing element due to insufficient immersion depth

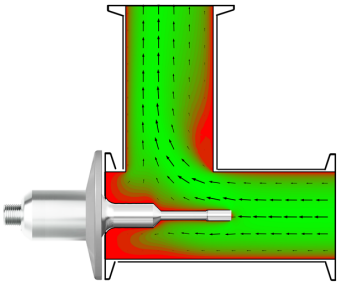

(b) Good flow conditions around the sensing element

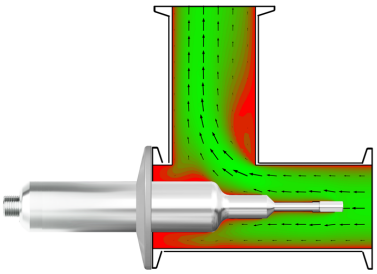

(c) Ideal installation and flow conditions around the sensing element for complex fluids

Figure 33 shows most common SRD flow cells and representations of the fluid behaviour around the sensor probe within the flow cells.

- The IFC-34N-SRD has $^{3}/_{4}$" NPT inlet and outlet ports. It is compatible with the sensor probe variant SRD-X1-34N and recommended for ambient temperature applications only due to the thermal balance requirement of the SRD, see Section 8.
- The IFC-1N25-1N0-SRD is a flow cell with 1" NPT inlet and outlet ports. It is compatible with the sensor probe variant SRD-X5-B1N25 which uses an NPT 1.25". The flow cell is designed to create a pure parallel flow over the sensing element allowing it to be used for complex fluid. This installation method also prevents a thermal imbalance and can be used for density measurement at non-ambient temperatures, provided sufficient flow and/or a thermal insulation around the flow cell.
- FET-15T-15T is a 1.5" Tri-Clamp elbow tee with 3-A certification available and suited for 3-A and EHEDG installations. It is designed for sensor probe variants with Tri-Clamp 1.5" flange. Also available in sizes of 2" and 3" Tri-Clamp.

Figure 34 shows overall dimensions of the main SRD flow cells. Learn more on SRD accessories flow cell type. [25]

Figure 33: Flow cell accessories for SRD



(a) IFC-34N-SRD



(b) IFC-1N25-1N0-SRD



(c) FET-20T-20T

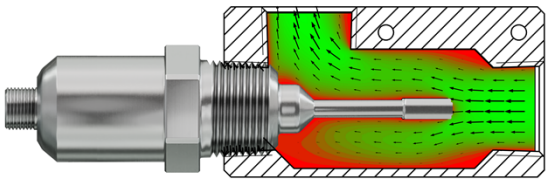

(d) IFC-34N-SRD fluid interaction

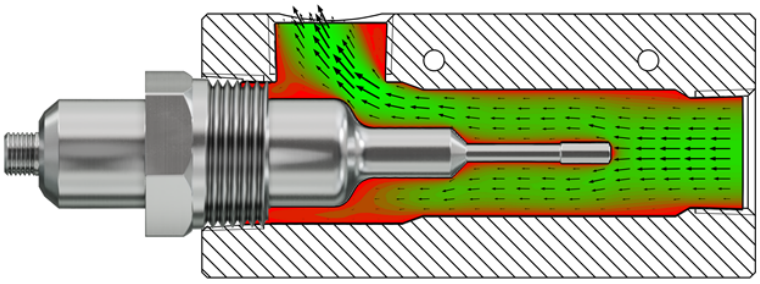

(e) IFC-1N25-1N0-SRD fluid interaction

Figure 34: Flow cell drawings - Units: mm [in]

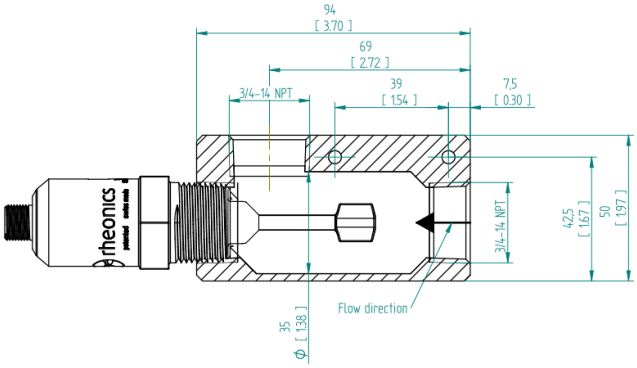

(a) IFC-34N-SRD with SRD Variant: X1-34N, only for ambient temperature

[25] rheonics.com/accessories-srd-flowcell

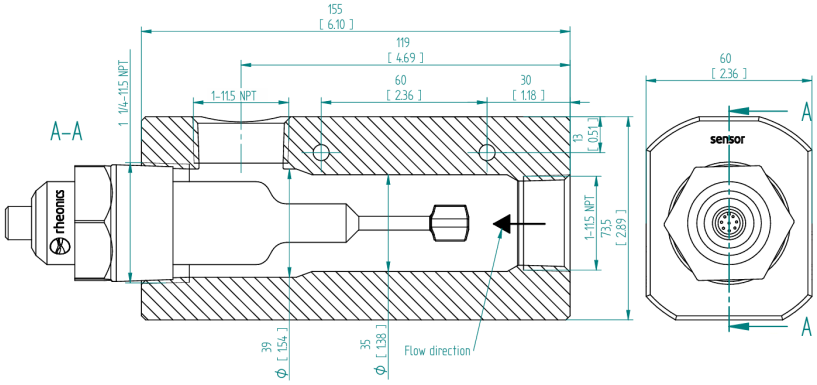

(b) IFC-1N25-1N0-SRD with SRD Variant: X5-A108-B1N25

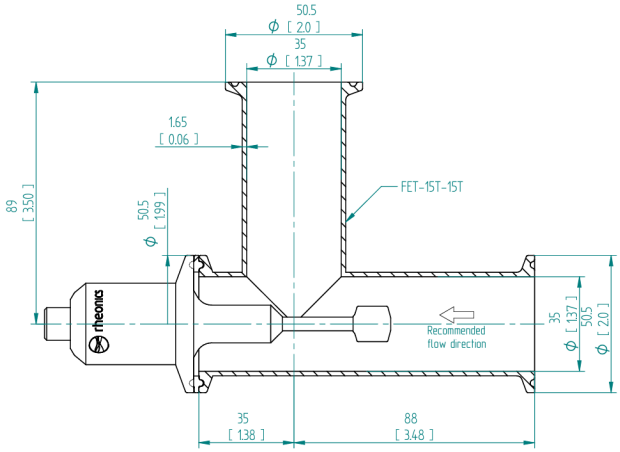

**(c) FET-15T-15T with SRD Variant: X3-B15T.
EHEDG/3-A Certified Installation**

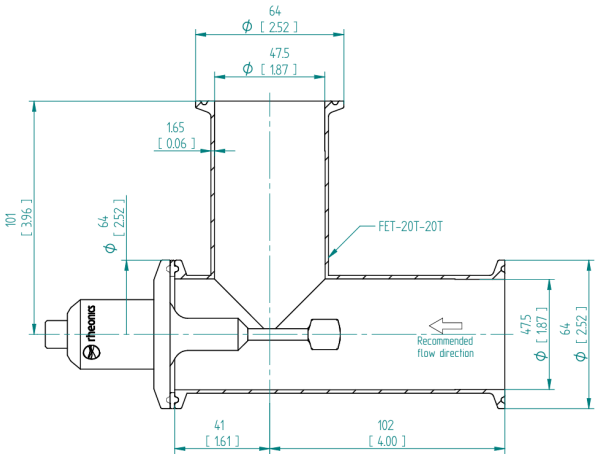

**(d) FET-20T-20T with SRD Variant: X3-B20T.
EHEDG/3-A Certified Installation**

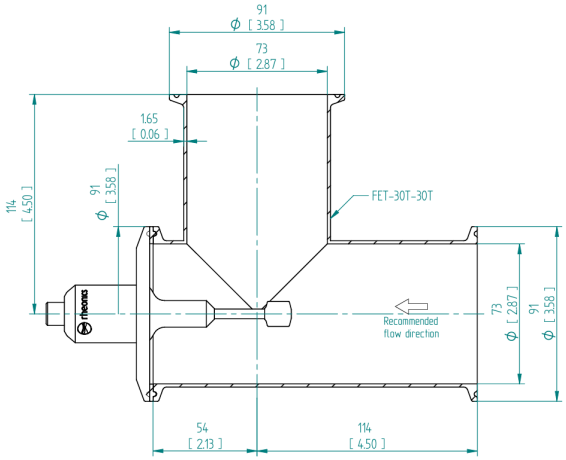

**(e) FET-30T-30T with SRD Variant: X3-B30T.
EHEDG/3-A Certified Installation**

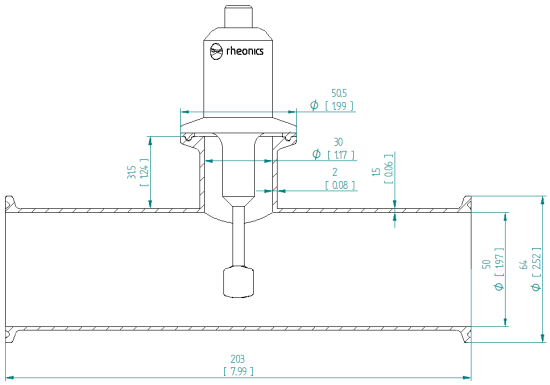

(f) FTP-15T-20T with SRD Variant: X3-15T, only for ambient temperature

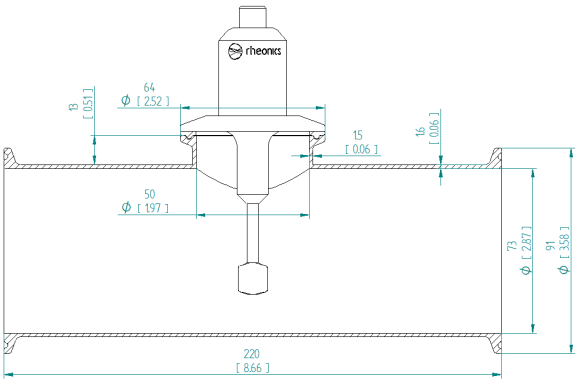

(g) FTP-20TS-30T with SRD Variant: X3-B20T. EHEDG/3-A Certified Installation

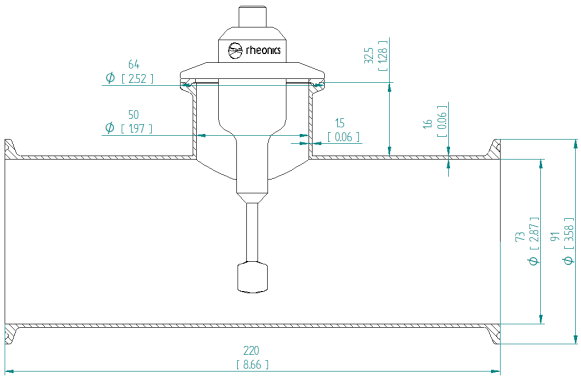

(h) FTP-20TL-30T with SRD Variant: X3-A95-B20T

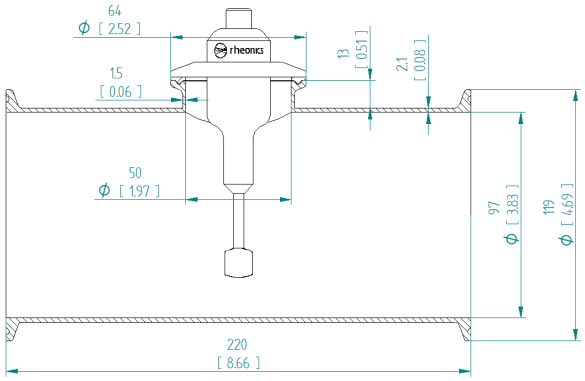

(i) FTP-20T-40T with SRD Variant: X3-A95-B20T

©Rheonics

9.3 Thermal Chambers

Rheonics offers the TCM (Temperature Control Modules) accessory line for the Type-SR sensor probes. It allows the measurement of small fluid volumes at controlled temperature points. Figure 35 shows the main TCM accessories.

- The STCM-PL is the Peltier-based offline TCM, especially recommended for laboratory use, as it requires sampling and allows offline measurements.
- The STCM-IFP is the Peltier-based online TCM. It allows the connection of the TCM to a process line or main reservoir from where a sample can be automatically extracted for static measurement.
- The Calibrator is Rheonics solution to calibrate the Type-SR sensors. See more in Section 13.1.

Learn more on SRD accessories thermal control type [26]

Figure 35: Thermal Control Module accessories



(a) STCM-PL

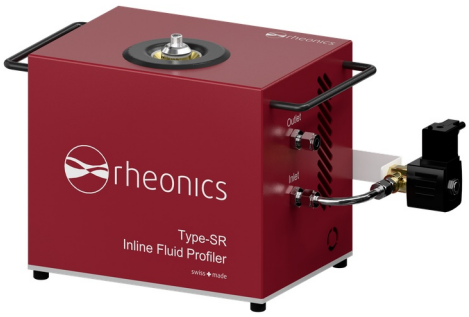

(b) STCM-IFP



(c) Calibrator

[26] rheonics.com/accessories-srd-thermalmodule

9.4 Table Top

Rheonics Table Top accessories are suited for use in laboratory or static setups. It includes probe stands (e.g., SCS) and calibration cylinders (e.g. SCC) for measurement of small fluid volumes, as shown in Figure 36. These are useful in calibration setups as described in Section 13.3

Figure 36: Table Top accessories



(a) SCS Calibration Stand **(b) SCC Calibration Cylinder**

Figure 37 shows overall dimensions of Table Top accessories. Learn more on SRD table top accessories [27]

Figure 37: Table top accessory setup - Units: mm [in]

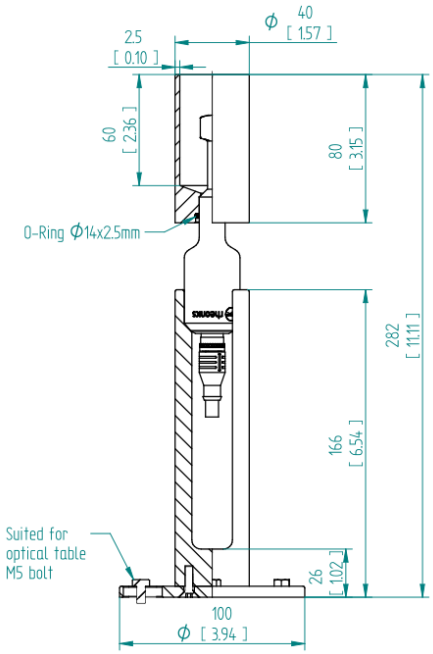

[27] rheonics.com/accessories-srd-tabletop

9.5 Mounting

Rheonics mounting kits (MKT) are offered for SRD long insertion probe variants (X5 or X8). They allow the clamping of the probe to a fixed point, generally at a tank's lip, to insert the probe deep enough. Rheonics MKT accessories for mounting are shown in Figure 38.

- Mounting kit MKT1 is used for a variable insertion length of the probe in the tank thanks to a compression-type clamping on the probe. The operator can clamp and unclamp the probe from the mounting kit continuously.
- Mounting kit MKT2 fixes the insertion length of the probe at the first use thanks to a heat-sensitive metal ring. Immersion depth can be fixed on site during first installation.
- Mounting kit MKT3 allows the use of CW module in sealed assemblies like flange connections, this means, the probe can be fixed without affecting CW operation.

Learn more on SRD mounting accessories [28]

Figure 38: Mounting MKT accessories



(a) MKT1 **(b) MKT2** **(c) MKT3**

9.6 Tank or long insertion mounting

Tank or long insertion mounting accessories are offered to facilitate the installation of the sensor probe with long insertion lengths, like in open tanks.

- TMA-34N is Rheonics Tank Mount Adapter for the -X1-34N sensor probe variant. It includes a front cage, bolts for assembly, an O-ring for sealing, and a back $^3/_4$" NPT female thread on the back, which allows a custom tube to be used for immersion of the probe in the tank. The TMA-34N is suited for ambient pressure conditions
- TMA-TT is Rheonics Tank Mount Adapter for the sensor probe teletube -X8 variant. It includes two front arms for protection, and a back side compatible with extension tubes (offered by Rheonics), or threads, in norms G3/4" and 1/2" NPT female or male through specific accessories. The TMA-TT is suited for pressures up to 70 bar.

Figure 39: Protective cage accessories



(a) TMA-34N **(b) TMA-TT**

[28] rheonics.com/accessories-srd-mounting



(c) TMA-TT with NPT male adapter AT-TT



(d) TMA-TT with NPT female adapter AB-TT



(e) TMA-TT with G3/4” male rear thread

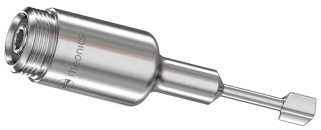

(f) SRD-X8 with G3/4” male rear thread by default

9.7 Self Cleaning Accessories

Rheonics CleanWave module (CW) creates low frequency vibration on the sensor probe, enabling the removal or prevention of solid deposits from forming on the probe’s surface. CW module is suggested for fluids prone to create deposits, as in ceramic slurry, where the Rheonics SlurrySense Self-Cleaning system is used. This accessory is used in combination with the sensor probe -X8, any of the mounting kits MKT1, MKT2, MKT3 and the protective cage TMA-TT (refer to complete system in figure 40b).

Figure 40: Protective cage accessories



(a) CleanWave module (CLW)



(b) SlurrySense (SLS) with CleanWave (CLW)

©Rheonics

9.8 Retractable System

Rheonics RPA (Retractable Probe Assembly), shown in Figure 41 allows the manual retraction of a long insertion probe (X5 or X8 variant) from the process. Learn more on SRD RPA [29]

Figure 41: Retractable Probe Assembly



9.9 Electronics Accessories

Rheonics offers accessories for the SME electronics. Some of them are shown in Figure 42. For example, the TMB-TRX is a mounting bracket that allows the installation of the SME-TRD/-TR electronics on a plane or tubular surface by means of bolts.
Learn more on SME accessories [30]

Figure 42: Electronics accessory examples



(a) Transmitter Mounting Bracket - TMB-TRX



(b) Cable Gland for SME- CG-SME



(c) Blind Plug for SME - BP-SME

[29] rheonics.com/accessories-srd-rpa
[30] rheonics.com/accessories-srd-sme

10 Sensor Electronics (SME) Markings

Each Rheonics SME is equipped with identification markings that allow clear traceability between the electronics unit and the corresponding sensor probe.
These markings are essential for correct installation, commissioning, service, and future support activities. The information provided on the SME labels must always be verified during installation and whenever maintenance or troubleshooting is performed.

The SME will have two external labels attached to one of its sides.

1. Upper label contains the unique SME serial number and the serial number of the sensor probe paired with the electronics. Since the SME and probe are factory-paired, this identification ensures that the correct electronics are used with the corresponding sensor, preventing measurement errors or device malfunction.
2. Lower label includes the wiring variant to be used with the SME. See Section 11.

NOTICE

The external labels should remain clearly visible after installation and must not be removed or altered.

The Rheonics SME is properly labeled, indicating the Power input, RS-485 port, sensor LED status, SD card port, display port, analog output signals, Ethernet Port, Sensor connector port, Rheonics Logo and Electronics serial number.

Figure 43: SME Markings

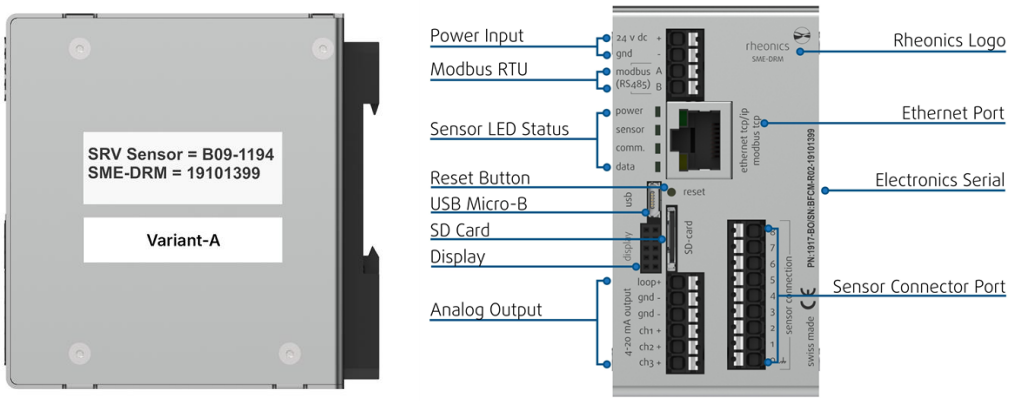

(a) SME Label side label **(b) front markings**

All Rheonics SME-TR and SME-TR(D) units also contain an internal identification label located inside the enclosure. This internal label provides additional traceability information, including the sensor serial number, the SME serial number, and the display serial number (only applicable for SME-TRD).

Access to the internal label requires opening the SME enclosure and should only be performed by trained personnel following all applicable safety procedures. After inspection, ensure that the enclosure is properly closed and sealed to maintain the specified IP rating.

©Rheonics

Figure 44: Internal label in SME-TRD that indicates sensor information

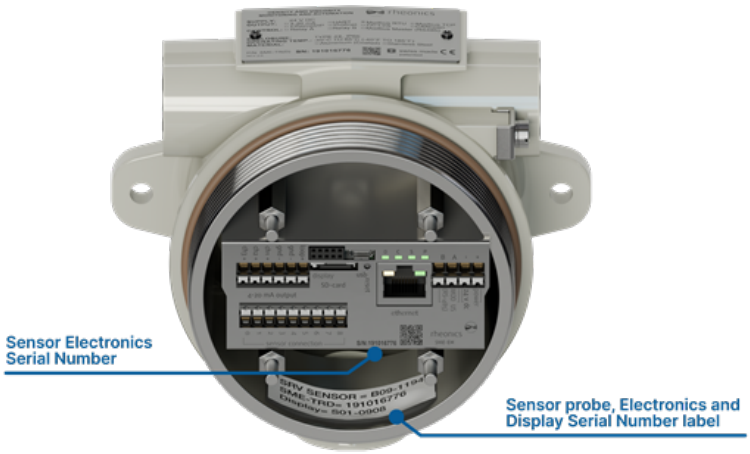

All Rheonics SME-TR and SME-TR(D) units also feature an external metal identification tag affixed to the enclosure. This tag provides information including supply voltage, output and control options, enclosure rating, operating temperature range, material, part number, serial number, and revision, along with the sensor serial number, the SME serial number, and the display serial number (only applicable for SME-TRD).

Figure 45: SME-TR(D) MetalSheet in SME-TRD that indicates sensor information



11 Sensor Wiring

The figures below show the typical connection of a Rheonics sensor probe and the SME electronics. These devices are connected using the sensor cable included in delivery, the physical connection on the probe is with an M12 8-pin female A-coded connector on the sensor cable. Depending on the type of sensor probe, a different wiring diagram is required. The wiring diagram is variant A-D and visible on the SME-housing, see figure 43.

11.1 Wiring: Variant A

Figure 46: Rheonics sensor wiring - Variant A

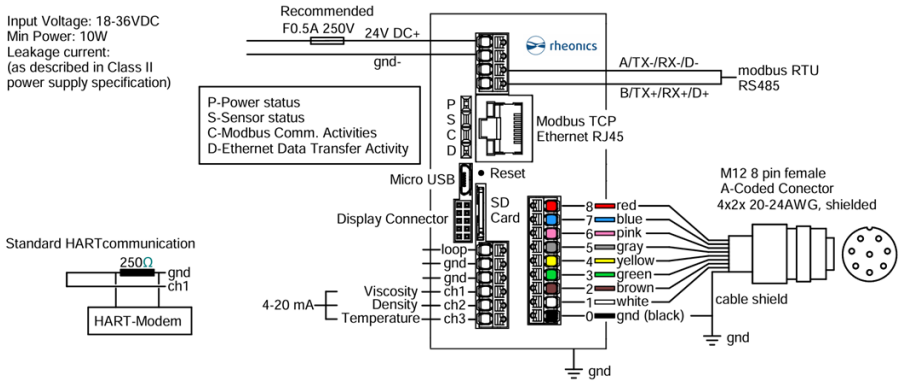

11.2 Wiring: Variant B

Figure 47: Rheonics sensor wiring - Variant B

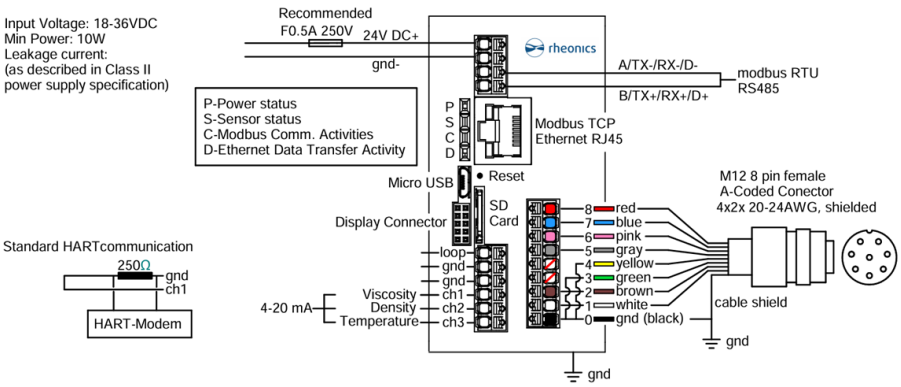

NOTICE

If cabinet ground is not available, connect all grounding signals to pin 0 of sensor terminal block.

©Rheonics

11.3 Wiring: Variant C

The wiring variant C uses the same schematic as Variant A, but the grounding is inside the SME-TR/SME-TRD housing using the In-housing Grounding Terminal, see figure 48. This connection provides a defined reference for signal grounding and supports stable operation of the SME electronics. The external grounding of the SME-TR/SME-TR(D) housing is according to section 11.5.

11.4 Wiring: Variant D

The wiring Variant D uses the same schematic as Variant B, but the grounding is inside the SME-TR/SME-TRD housing using the In-housing Grounding Terminal, see figure 48. This connection provides a defined reference for signal grounding and supports stable operation of the SME electronics. The external grounding of the SME-TR/SME-TR(D) housing is according to section 11.5.

11.5 Grounding of SME-TR/SME-TRD

These versions are equipped with an external grounding tab located on the SME-TR/TRD housing, see figure 48. This grounding tab must be connected to the cabinet ground or facility earthing. The grounding connection establishes an equipotential reference between the SME-TR/SME-TR(D) housing, the control cabinet, and other bonded metallic structures, thereby reducing the risk of ground loops and limiting the impact of electromagnetic interference (EMI).
For optimal performance, the grounding conductor connected to the external grounding tab should be as short as possible and routed directly to the main grounding point of the cabinet. The use of a low-impedance conductor with appropriate cross-section, in accordance with local regulations, is strongly recommended. Cable shield is already grounded to enclosure from factory.

Figure 48: SME-TR(D) grounding tabs

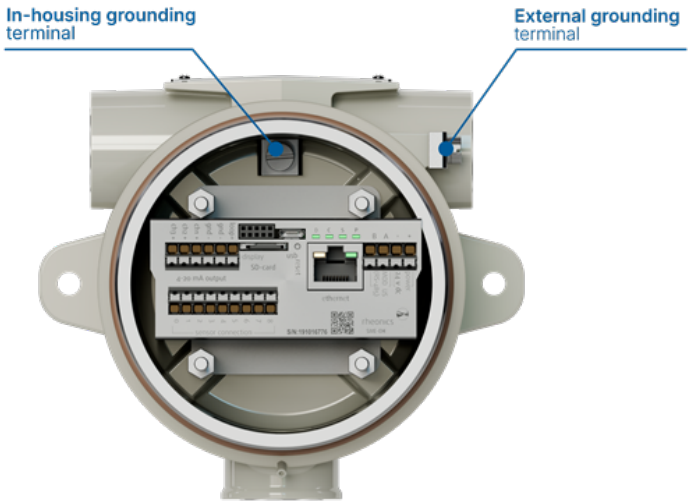

The cable shield is already bonded to the housing through the metal cable gland, ensuring proper termination of the shield and effective attenuation of conducted and radiated noise. Care should be taken to avoid interrupting the shield connection during installation or maintenance.

Using both the external grounding tab and the internal grounding terminal together results in a comprehensive grounding diagram. This dual-path grounding approach enhances EMC performance, improves noise immunity of measurement and communication signals, and contributes to reliable long-term operation in demanding industrial environments.

11.6 Wiring examples

Figure 49 shows the wiring configuration A-D.

Figure 49: Wiring examples A-D. 1: Power (24VDC) 2: Sensor cable

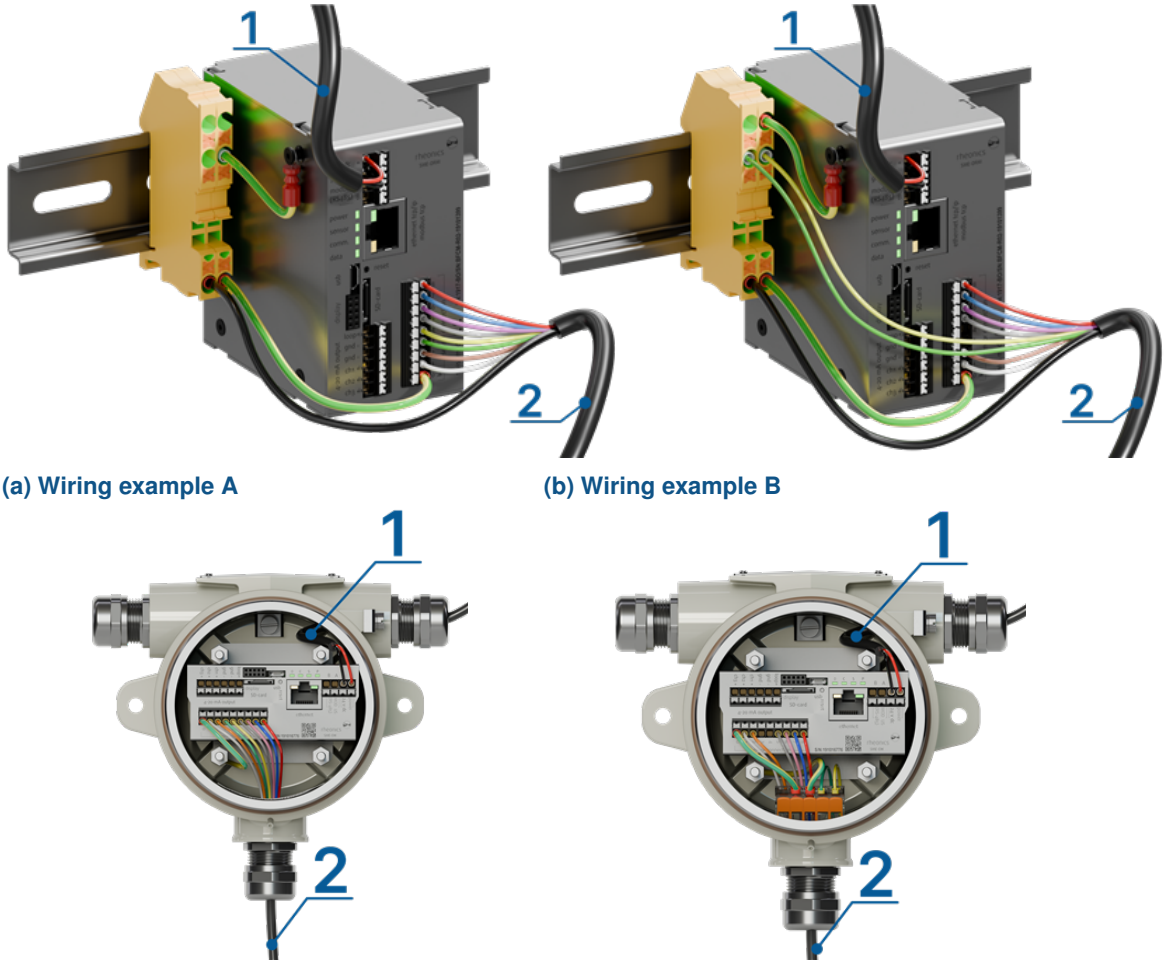

(a) Wiring example A

(b) Wiring example B

(c) Wiring example C

(d) Wiring example D

As shown in Figure 49 arrows 1 and 2 indicate the SME power line and the sensor cable, respectively.

WARNING

Each EX sensor is supplied with its own user manual, which is shipped together with the sensor, always check the Ex manual that comes with the sensor.

©Rheonics

11.7 Connecting and disconnecting wires to the terminal blocks on SME

To connect wires to the SME, insert the crimped end of the wire into the correct port on the terminal block until it clicks firmly into place and cannot be pulled out with a gentle tug. Do not apply excessive force when pulling on the wires, as this may damage the terminal block or the internal contacts.

Figure 50: Sensor cable with crimped wires

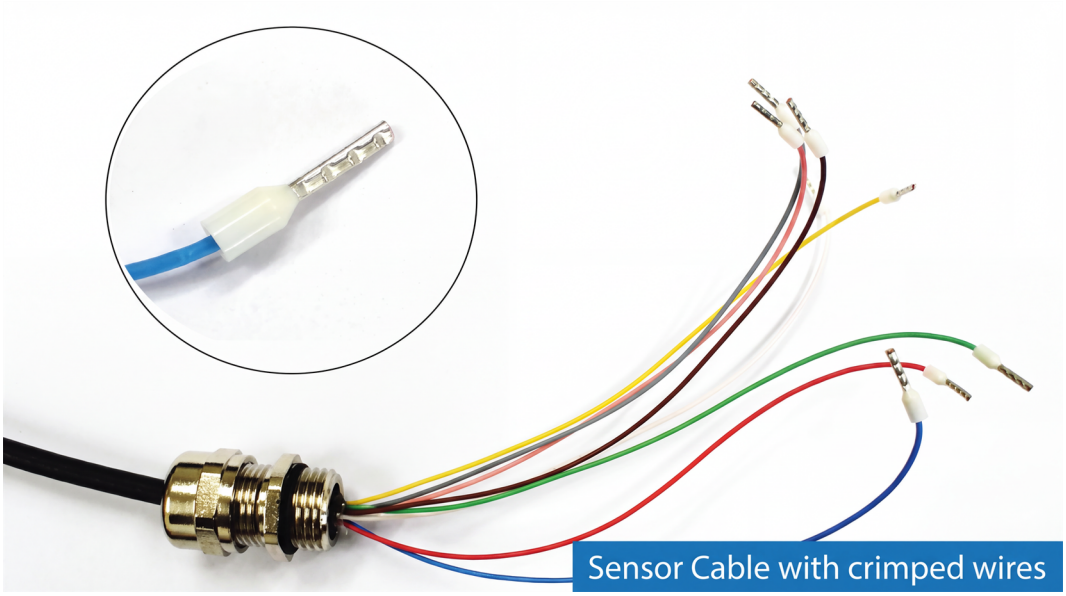

To disconnect the sensor wires, press the white release tab corresponding to the desired port using a small flat-head screwdriver, as shown in Figure 51. While holding the white tab pressed, pull the cable out of the terminal block with the other hand. Ensure that the wire is fully released before removing the screwdriver.

Figure 51: Disconnecting a wire from the SME

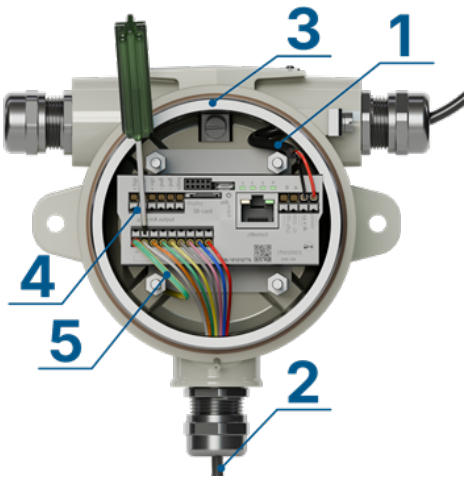

No.	Component	Description
1	Power cable	Cable providing power to the SME
2	Sensor cable	Cable connecting the sensor to the electronics
3	Housing	SME-TRD enclosure containing internal electronics
4	Screwdriver	Tool used for terminal connections and adjustments
5	Grounding cable	Cable used for proper grounding of the system

Table 27: Disconnecting a wire from the SME

For additional guidance, refer to the article *Cabling Best Practices*[31] available in the Rheonics documentation.

11.8 Grounding and Earthing Recommendations for Rheonics Sensor Installations

Proper grounding and earthing are essential to ensure both personnel safety and measurement stability. Earthing(PE — protective earth) provides a safe path for fault currents, protecting operators and equipment, while grounding establishes a stable electrical reference that minimizes noise and improves signal integrity.

Signal grounding helps stabilize the SME electronics and associated communication interfaces, reducing susceptibility to electromagnetic interference (EMI) and radio-frequency interference (RFI). This is critical for maintaining accurate and repeatable measurements.

All metallic structures within the electrical cabinet should be bonded together to create an equipotential zone. Cable shields must be terminated cleanly and securely to ground using low-impedance connections. Power cables and signal cables should be routed separately whenever possible to prevent inductive coupling and noise injection into measurement signals.

11.9 Powering the SME

The sensor requires an external DC power supply with the following specifications:

- **Nominal supply voltage:** 24 V DC
- **Acceptable voltage range:** 18–36 V DC
- **Maximum current consumption:** 200 mA
- **Recommended current capacity:** $\geq$ 400 mA
- **Maximum power consumption:** 5W
- **Recommended power supply rating:** min. 10 W
- **Recommended fuse:** 500 mA, slow-blow

The power input terminals are labeled **24 V DC (+)** and **GND (–)**. Connect a regulated 24 V DC power supply to these terminals on the SME.

Recommended power supplies: Rheonics-approved power supplies, including UL-compliant units, are recommended to ensure electrical safety, compliance with applicable standards, and reliable operation in industrial environments.[32]

[31] https://rheonics.com/docid/sup-ele-cabins
[32] https://rheonics.com/docid/powering-the-sensor

Figure 52: Power terminals in SME

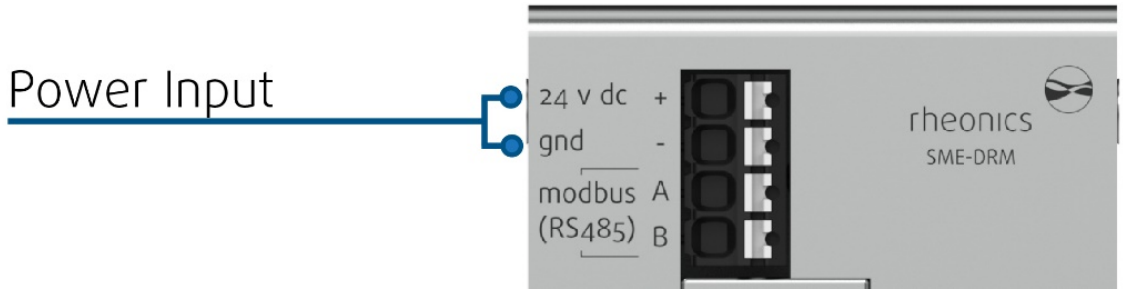

CAUTION

It is important to avoid ground loops in the setup/plant where the SME is used. Ground loops can lead to excessive currents on the ground/return wire of the SME's 24V power supply which can damage the unit. To prevent this, we strongly recommend that the SME is powered by a separate 24V power supply with galvanic separation. Otherwise, the SME might be permanently damaged.

CAUTION

Rheonics sensors can be configured over USB but the sensor will NOT make any measurements over USB supplied power. For operation (factory floor or in lab), it is recommended to power the sensor using a galvanically separated, certified power supply from a reliable source. Check power supply to ensure you get the required voltage and current without significant noise.

12 Sensor Electronics Status LED

12.1 SME Status LED

All Rheonics SME units include four LEDs, listed in the following section, with their functions described below. The SME-DRM (E3), SME-TRD (E1) and SME-TR (E2) have the same four LEDs:

Figure 53: SME-DRM LED states E3

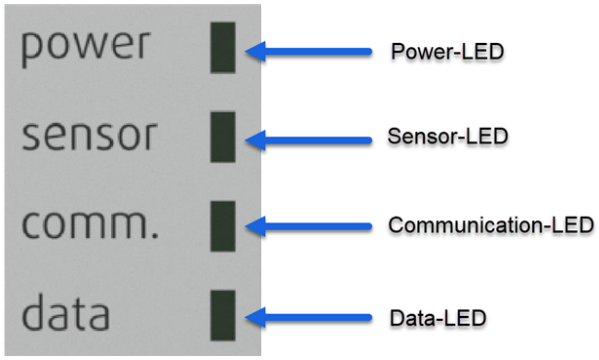

Figure 54: SME-TRD(1) and SME-TR(2) Electronics LED states

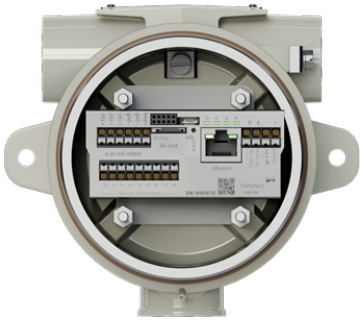

LED	OK	Not OK	Description
P	Green	Off (no power)	Power
S	Green blinking	Red blinking	Sensor behavior
C	Green blinking	Off	Modbus communication
D	Green blinking	Off	Data (Ethernet communication)

Table 28: SME LED configuration

12.2 SME-TRD Display Status LED

The SME includes six LEDs, listed in the following section, with their functions described below.

Figure 55: Rheonics SME-TRD - Display LEDs

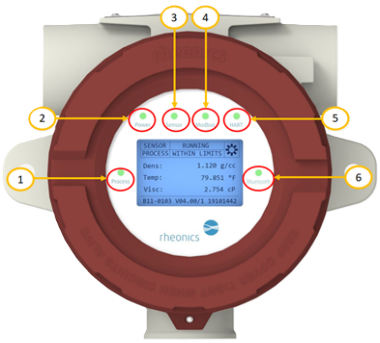

©Rheonics

1. **Process/CAL LED:** The LED light will operate under the following conditions.

Status	Description
Always OFF	Sensor is in air
Always GREEN	Sensor is in fluid
RED	Unstable readings

Table 29: Process LED status

2. **Power LED:** Always green when the SME is powered. Blinks red when only the USB cable is connected and no external power supply is active.
3. **Sensor LED:** Blinks green during normal operation. Turns red when an error is present.
4. **Comm LED:** Blinks green when Modbus communication is active. Always off when Modbus communication is not in use.
5. **HART LED:** The LED light will operate under the following conditions.

Status	Description	OK	NOK
Always OFF	HART disabled		×
Always GREEN	HART enabled, idle state	✓	
Blinking GREEN	Bytes received; command not completed	✓	
Blinking RED	Bytes received; data corrupted		×
Always RED	Loop open; no HART communication possible		×

Table 30: HART LED status

6. **Bluetooth LED:** The LED light will operate under the following conditions.

Status	Description
Always OFF	Bluetooth is disabled.
Always BLUE	Bluetooth is enabled and pairing mode is active.
Blinking BLUE	Bluetooth communication is active.

Table 31: Bluetooth LED status

12.2.1 SME-TRD warning and errors

The SME Display contains the following information.

Figure 56: SME-TRD display parameters and sensor information

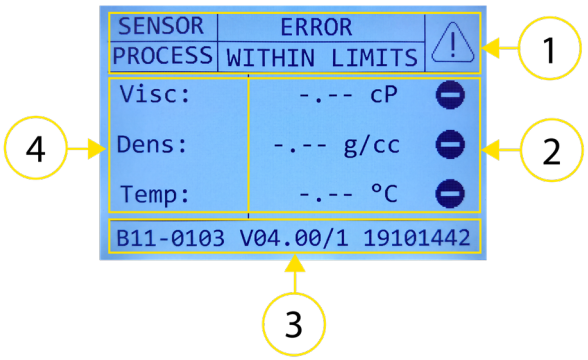

1. **Sensor and Process:** The sensor (first) line can display the following status.

Status	Description
Running	Sensor readings are normal.
Error	Sensor configuration issue.
Unstable	Sensor readings are not reliable.
Unlocked	The sensor is not locking properly to a measurement value.
Unavailable	Communication between the SME and the display is not available.

Table 32: Sensor line status

The process (second) line can display the following status.

Status	Description
Out of range	Sensor readings are outside the measuring range.
Within limits	Sensor readings are within the measuring range.

Table 33: Process line status

2. **Parameter value:** Each line displays the measured value and the corresponding unit. A status indicator on the right shows whether an issue is present for the specific parameter.
3. **Sensor data:** Displays sensor information such as serial number, firmware version, and IP address.
4. **Parameter name:** Displays the name of the parameter currently shown on the display.

13 Maintenance

13.1 Calibration/Scaling

All Rheonics sensors are factory calibrated and do not need recalibration for use. Calibration may be required as part of Quality Control (QC) for ensuring expected accuracy, uncertainty, and reliability on readings, and/or compliance with regulations or standards governed by law, such as ISO 17025 or FDA, for food and pharmaceutical industries. These regulations designate a standardized verification of sensor operation to ensure safety, quality, and correct production.

The standard method of calibrating the Rheonics sensors is using the Rheonics Calibrator (Figure 57). The Calibrator is a Peltier-Element based heating and cooling system that has been designed to create a thermally uniform environment suited for viscosity, density and temperature calibration. The Calibrator can be used on or off-site to calibrate the sensors and perform scaling if required.
Table 34 shows the components used in Rheonics Calibrator. It has a sample cylinder inside (Figure 57b), which is filled with a calibration fluid as shown in Figure 57c. Learn more on the calibration fluids in Section 13.2.

Figure 57: Type-SR calibration in Rheonics Calibration



(a) Calibrator **(b) Calibrator, components** **(c) Measurement chamber**

Number	Part	Code example
1	Sensor probe	—
2	Calibration cell	TCC
3	Calibration fluid	—

Table 34: Components of Rheonics Calibrator

More information about the Calibrator can be found on here[33]

13.2 Calibration fluids

Calibrations are best performed using NIST traceable viscosity- or density standards such as S6/S60/S600/S8000 etc. For low viscosities, pure fluids such as n-dodecane, n-hexane are also good

[33] https://rheonics.com/products/calibrator/

alternatives. Silicone oils are not suited as many exhibit a shear thinning and thus non-Newtonian behaviour. We recommend avoiding water for calibration, as it contains lots of dissolved gasses, causing the formation of bubbles which causes errors in the viscosity and density measurement. The bubbles formation can be suppressed by a degassing step such as boiling or ultrasound bath treatment. Such procedures help but if not done carefully, they do not guarantee a successful calibration/measurement. The same holds true for any water-based fluid such as SPT (sodium polytungstate) solution, frequently used for high-density calibration.

13.3 Calibration/Scaling in climate chambers

In case a calibrator cannot be used, the calibration must be performed in a thermally well-controlled environment, such as a high convection oven or a climate chamber. Hot plates or similar devices are not suited for calibration as they have insufficient thermal uniformity, creating large temperature gradients and thus viscosity gradients over the sensing element. The viscosity of all calibration oils depends strongly on temperature. Typical temperature dependencies are around $3-8\%$ per ^oC, making a uniform temperature around the sensing element a must for any viscosity measurement.

For density calibration a thermally uniform environment is required to avoid a thermal imbalance on the SRD, rather than in the fluid itself. For high accuracy measurement, the first 120mm measured form the sensor tip (see figure 58b) must be thermally uniform, otherwise, systematic errors are introduced. These systematic errors appear both in the viscosity and density measurement. Density calibrations with a target accuracy of $0.01^g/_{cc}$ can be performed at room temperatures, where the effects of the thermal imbalance are negligible. Density calibration requirements with a high accuracy requirement must always be performed in a controlled thermally uniform environment.
For sensor calibrations not performed using the calibrator, Rheonics recommends the following procedure.

1. **Air-Check**
   This “air check” is useful as a quick verification of the SRD correct operation. The sensor does not use moving parts, so if the viscosity and density readings in the air are zero, then the sensing element is clean. Having a clean sensor is absolutely critical, as small contaminations, especially on the sensing element influence the measurement.

   (a) Remove the SRD from process
   (b) Clean the SRD of residual fluid or dirt
   (c) Leave the SRD in the air, and verify that nothing is in contact with the sensing element.
   (d) Verify the viscosity and density reading is zero. This can be checked through the SME-TRD display, RCP software, or any external integration system (e.g. PLC). During this check, the temperature of the SRD should be uniform, otherwise, the density reading may not be zero.

2. **Calibration verification to NIST traceable viscosity reference**
   This method follows Rheonics factory calibration procedure by comparing the SRD reading with a known fluid at a well-defined temperature. For both density and viscosity measurement, it must be ensured that at least 120mm starting from the sensing element (figure 16) is in contact with fluid. A non-uniformities temperature will cause systematic viscosity and density errors. For high accuracy, the temperature uniformity must be better than $0.1°C$.

   (a) Place the SRD in a thermally uniform environment, such as a climate chamber or a precise oven with a strong convection, like in figure 58a. Ensure temperature uniformity in the area shown in figure 58b.
   (b) Immerse the sensor probe into a well-defined fluid such as NIST-traceable viscosity standards or well-known pure substances such as n-dodecane. Rheonics offers calibration stands and cylinders, as shown in figure 58b and listed in table 35. Contact Rheonics Team for further information.
   (c) Measure the SRD viscosity and density at a constant temperature. It will take time until the SRD reading is stable over time, as the fluid surrounding the sensing element reaches the oven temperature. This process usually takes anywhere between 1.5 hours to 3 hours, depending on the amount of fluid. Rheonics STCM or Calibrator are much faster.

(d) Compare the SRD reading with reference data.

(e) Example

i. The Viscosity standard S60 is used at 50 °C

ii. From the bottle/fluid-data sheet, we get the dynamic viscosity and density at 50 °C
dynamic viscosity: 30.67 $mPa \cdot s$
Density: 0.8472 g/cc

iii. We take the SRD reading at a stable temperature (no drift in temperature over time):
SRD viscosity reading: 30.83 $mPa \cdot s$
SRD density reading: 0.8451 g/cc

iv. Compare the viscosity and density value

3. If there is error exceeds your quality requirement, adjust the viscosity and or density reading by means of scaling using RCP, section 15.

Figure 58: SRD calibration setup example



(a) Sensor probe placed in oven for thermal uniformity during calibration

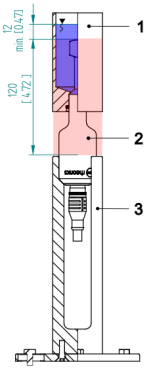

(b) Probe area required in thermal equilibrium for calibration

Number	Part	Code example
1	Calibration cylinder	HCC-SRD
2	Sensor probe	-
3	Calibration stand	SCS-00A

Table 35: Components of Rheonics calibration setup

13.4 Density-Scaling and Offset Correction

To compensate for abrasion, non-Newtonian or other secondary effects on the density reading, Rheonics recommends performing a density offset correction by means of scaling (see RCP manual).
The offset-correction is best performed under operational conditions, i.e. the sensor probe remains installed in the process. This is needed as the density reading of some non-Newtonian fluid can be flow dependent. The SRD-Density reading is best compared (and scaled) against the standard density measurement method by the quality department. Such methods may include measure the weight of a known volume. The scaling is performed using RCP. Refer to the RCP manual or the Rheonics support portal[34] for detailed instruction.

[34] https://rheonics.com/support/srd-density-scaling

13.5 Cleaning

The SRD sensor probe is CIP compatible, meaning it can be cleaned in-line with solvents and water as part of the customer's standard cleaning procedure. Solvents used for cleaning must be compatible with the probe's material.

General recommendations for cleaning are:

- Check your probe's material and ensure only compatible chemicals are used. Probe may have two materials and chemicals used must therefore be compatible with both, or appropriate safeguards should be in place to ensure that cleaning chemicals do not come in contact with incompatible materials.
- Inline cleaning is generally sufficient.
- Only remove the sensor probe from the line when needed or when dismantling the line is the standard cleaning procedure. For example, manual cleaning due to clogging or adherent films.
- Cleaning can be done with appropriate solvents and/or by wiping the probe with a solvent-saturated cloth or paper. Vinegar or diluted caustic soda could also be used.
- Do not let fluid solidify on the probe. If this occurs, soak the probe in an appropriate fluid for some hours to dissolve the solid.
- Under no circumstances should abrasives be used to clean the probe since these will change its geometry, affect its calibration and irreversibly damage the sensor probe.
- Never use ultrasonic cleaning methods like ultrasonic baths. They can damage the probe.

The user can validate that the sensor probe is properly cleaned using the Clean Sensor Status. This is accessible over most communication protocols or by using the RCP software. In the software, go to the Scaling tab where indicators for the cleanness of the probe and current state (in air or fluid) can be found. For more information, check RCP-OP and Support Portal.

13.6 Cleaning, sensor electronics

All sensor electronics (E1-E4) are maintenance-free. No preventative maintenance is required.

Cleaning and Inspection: Regular cleaning and inspection are not required under normal operation. If cleaning is required:

- For E3 sensor electronics (SME-DRM) use electrically non-conductive fluids compatible with the SME housing (PC+PBT). Isopropanol is recommended. Acetone must not be used.
- For E1/E2 sensor electronics (SME-TR/SME-TRD), make sure the lid and all connections are closed. Any fluid, compatible with PUR (polyurethane) may be used.
- Cleaning can be done with appropriate solvents and/or by wiping the probe with a solvent-saturated cloth or paper. Vinegar or diluted caustic soda could also be used.
- For cleaning the inside of the E1/E2 sensor electronics (SME-TR/SME-TRD), use electrically non-conductive fluids compatible with the SME housing (PC+PBT). Isopropanol is recommended. Acetone must not be used.

13.7 Repair

Contact Rheonics Support Team, they will verify the sensor status and if needed continue with an RMA for return of unit.

⚠ CAUTION

- Battery May Explode If Mistreated.
- Do Not Disassemble Or Dispose Of In Fire

13.8 Storage

SRD probe is delivered with a packaging sleeve for the sensing element and a cap for the M12 connector. Keep both protection accessories in place when storing the probe.

©Rheonics

14 Communication Protocols

Some integration protocols come with the sensor by default, while others must be requested during sensor ordering. A complete and updated list of supported protocols is available on the Rheonics website.[35]

All communication manuals referenced in this section are available in the Resources section of the Rheonics website.[36]

14.1 4–20 mA (C1)

Rheonics SME sensors provide three independent 4–20 mA output channels, as shown in Figure 59 and 60. The 4–20 mA interface is widely used due to its simplicity, requiring only two wires to transmit sensor readings to external devices. However, analog signals are susceptible to electrical noise and achieve optimal accuracy only under appropriate field conditions.

By default, SR-type sensors output viscosity, density, and temperature through the 4–20 mA channels. These outputs can be customized using the RCP Software Manual.[37]

14.1.1 Wiring diagram for SME and 4–20 mA

Figures shown in 59 and 60 illustrates the recommended wiring diagram for connecting the Rheonics SME to a 4–20 mA input module. Detailed wiring recommendations are provided in the Rheonics support portal.

14.1.2 Electrical parameters

- Load impedance: 0 to 720 Ω
- Output range: 4–20 mA (3.5 mA error indication)
- Galvanic isolation: None

Wiring option A

- Connect the positive terminal of the current input module to the desired SME channel terminal.
- Connect the negative terminal of the current input module to the negative power supply terminal used for the SME.

Figure 59: 4-20mA outputs available in the SME Wiring option A

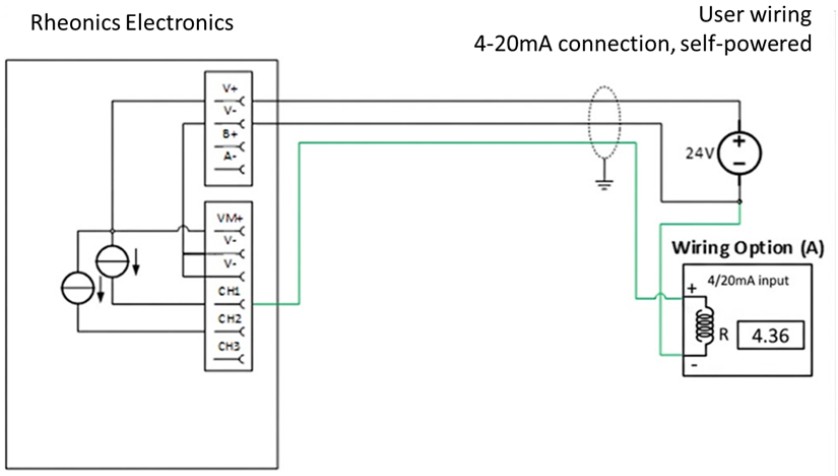

Wiring option B

[35] https://rheonics.com/electronics-and-communication
[36] https://rheonics.com/docid
[37] https://rheonics.com/docid/sup-ele-420intro

- Connect the positive terminal of the current input module to the desired SME channel terminal.
- Connect the negative terminal of the current input module to the Gnd– terminal of the SME.

Figure 60: 4-20mA outputs available in the SME Wiring option B

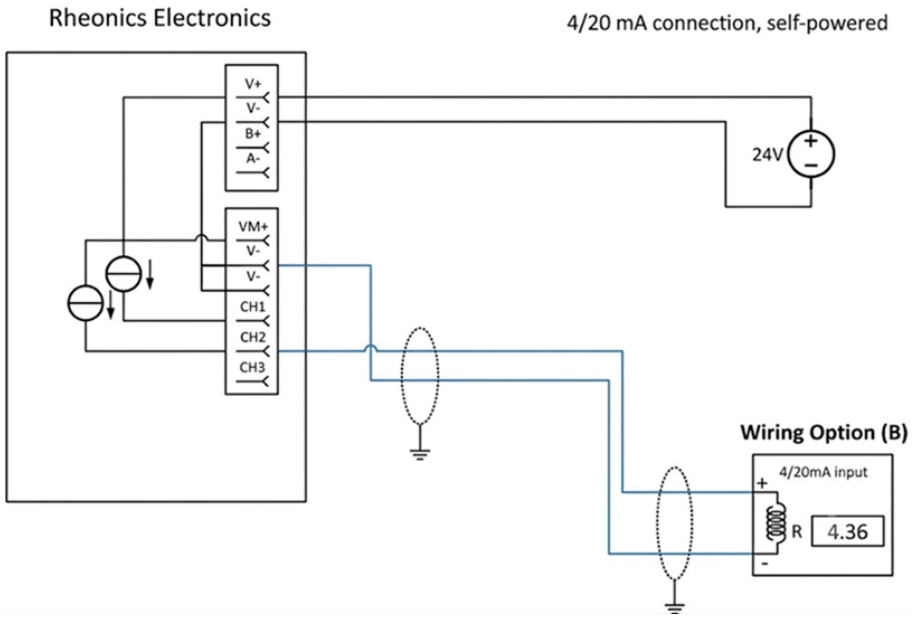

14.1.3 Is the Rheonics SME a passive or active device?

The Rheonics SME is a 4-wire *active* device. Passive devices are typically 2-wire devices that require an external power supply, whereas active sensors use their own power supply to generate and control the analog output.

Figure 61: 4-wire SME, a block diagram of the Rheonics SME

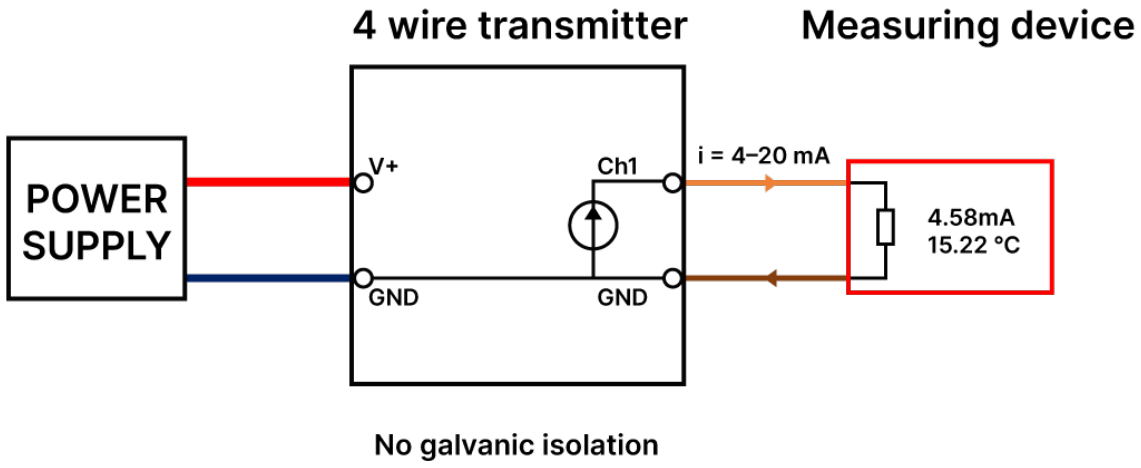

An active analog output has the following characteristics:

- When powered, the analog output provides a non-zero voltage or current.
- The SME output must be connected to a *sinking* PLC input.
- The 4–20 mA outputs are not galvanically isolated. Routing these signals to off-site locations is not recommended unless the receiving input provides galvanic isolation.

NOTICE

The 4-20mA outputs are not galvanically isolated. It is not recommended to route the 4-20mA to off-site locations if the corresponding 4/20mA input does not provide galvanic isolation.

14.1.4 Configuring the Output Range

4–20 mA Output Configuration

The mapping between engineering units and the 4–20 mA output is fully configurable. The default range is set during factory configuration based on the ordered viscosity range, but it should be adjusted to match the actual process operating window for maximum measurement sensitivity.

To configure via RCP:

1. Navigate to the Communication Tab → Analog Output section
2. For each channel (CH1, CH2, CH3):
   - Select the parameter to output (viscosity, temperature, density, kinematic viscosity, or any available parameter)
   - Set the low-range value (engineering units corresponding to 4 mA)
   - Set the high-range value (engineering units corresponding to 20 mA)
3. Click Apply to upload the configuration to the SME

Example – Viscosity Channel (0–100 cP)
Table 4–20 mA Range Example:

Setting	Value	Current
Low range	0 cP	4 mA
High range	100 cP	20 mA

Table 36: 4–20 mA output range configuration

NOTICE

Choose a range that closely matches the actual process variation for maximum sensitivity. A range of 0–3,000 cP on a process that operates between 50 and 100 cP would provide only 0.27 mA of signal span for the entire operating window, making it difficult for the PLC to detect meaningful viscosity changes. In this case, setting the range to 0–200 cP would give 8 mA of span across the operating window, a 30× improvement in effective resolution.

Error and Fault Indication

The SME outputs 3.5 mA (below the normal 4 mA floor) when a fault condition exists on that channel.

Possible causes:

- Sensor not locked (error codes E01, E02, E11, E12, E21, E22)
- Sensor not connected (E13, E99)
- Measurement value outside the configured range

Configure the PLC/DCS to detect a current below 3.8 mA as an alarm condition. Do not interpret 3.5 mA as a zero-value measurement.

Verifying Analog Output in the Field

- **Check scaling alignment:** Verify that the PLC's 4 mA and 20 mA engineering unit values match the SME's configured low and high range. A common error is mismatched scaling, which causes incorrect readings.
- **Measure the actual loop current:** Using a milliamp meter or series ammeter, measure the loop current and compare it with the expected values.
- **Check loop impedance:** Ensure that the total loop impedance (cable resistance plus PLC input impedance) does not exceed 720 Ω, as this can cause voltage compliance issues. Reduce cable length or impedance if required.
- **Check for 3.5 mA output:** If the output is stuck at 3.5 mA, check the sensor status and review error codes to identify the fault condition.

Analog Output Calibration and Verification
The 4–20 mA outputs are factory-calibrated. Drift over time may require verification and trimming.
Verification procedure:

1. Connect a calibrated milliamp meter (accuracy $\geq$ 0.05%)
2. Command 4 mA output and record measured current
3. Command 20 mA output and record measured current
4. Compare against tolerance (typically $\pm$0.02 mA)

Trimming (if needed): The DAC offset and gain can be adjusted per channel using RCP to align physical output with commanded values.

NOTICE

Analog output calibration verifies electrical output only, not viscosity measurement accuracy. For measurement calibration, refer to Chapter 13.

For diagnostics, see support.rheonics.com articles on 4–20 mA troubleshooting and signal inconsistencies.

14.2 Modbus RTU (C2)

Rheonics SME supports Modbus RTU communication over an RS-485 interface. This protocol enables real-time access to multiple sensor parameters using register-based data exchange and allows interoperability with devices from different manufacturers.

Register mapping, timing parameters, and integration details are described in the Modbus RTU Operator manual (MRTU-OM-2403).[38]

14.3 Serial USB (C3)

All Rheonics SME devices include a USB interface for initial configuration and real-time data monitoring using the RCP software. Detailed information on USB-based communication and configuration is provided in the Rheonics support portal.[39]

14.4 Bluetooth (C5)

Bluetooth Low Energy (BLE) 4.0 is supported on the SME-TRD variant only. This wireless interface allows transmission of measured data to external devices.[40]

[38] https://rheonics.com/docid/mrtu-op
[39] https://rheonics.com/docid/sup-ele-usbcom
[40] https://rheonics.com/docid/sup-ele-bleapp

14.5 Modbus TCP (C6)

The SME supports Modbus TCP communication over Ethernet, providing access to multiple registers containing sensor data.

Configuration details and register definitions are provided in the Modbus TCP Operator manual (MTCP-OM-2403).[41]

14.6 EtherNet/IP (C7)

All SME variants can be ordered with EtherNet/IP support. This protocol enables high-speed data transfer between Rheonics sensors and external devices such as Allen-Bradley PLCs through the SME Ethernet port.

Comprehensive integration guidelines are provided in the Ethernet/IP Operator manual (ENIP-OM-2407).[42]

14.7 HART (C8)

All Rheonics SME variants can be ordered with HART communication. Using HART, the sensor transmits four parameters digitally:

- PV – Viscosity
- SV – Density
- TV – Temperature
- QV – Sensor status

Configuration, parameter mapping, and diagnostics are described in the HART Operator manual(HART-OM-2511).[43]

14.8 PROFINET (C9)

All SME variants can be ordered with PROFINET support. This protocol enables real-time communication at 100 Mbps full duplex through the SME Ethernet port, improving system performance, precision, and integration.

Device configuration, GSD files, and data mapping are described in the Profinet Operator manual (PNET-OM-2202).[44]

14.9 WirelessHART (C10)

All SME variants can be ordered with WirelessHART support. This protocol enables reliable, secure data transmission via a self-organizing mesh network, eliminating the need for signal cabling while ensuring seamless integration into existing HART-based asset management systems.

Configuration, parameter mapping, and diagnostics are described in the WirelessHART Communication Manual.29

14.10 RCP software

The Rheonics Control Panel (RCP) is a software application that enables full utilization of Rheonics sensor capabilities, including sensor configuration, measurement visualization, and download of historical log files. RCP communicates with the sensor via two interfaces: **USB** for direct, point-to-point connection to a single sensor, and **Ethernet** for network-based access, enabling remote monitoring and integration into broader industrial systems.

[41] https://rheonics.com/docid/mtcp-op
[42] https://rheonics.com/docid/enip-op
[43] https://rheonics.com/docid/hart-op
[44] https://rheonics.com/docid/pnet-op

14.11 IO-Link, CC-Link, and future protocols

For information on additional communication protocols such as IO-Link[45] and CC-Link, contact the Rheonics Support Team or refer to updates published in the Rheonics Resources section.[46]

[45] https://rheonics.com/docid/iol-op
[46] https://rheonics.com/social-media/

15 Rheonics Software

15.1 Rheonics Control Panel

The Rheonics Control Panel (RCP) is software that allows the user to fully utilize the capabilities of Rheonics sensors. The software is used for sensor configuration, measurement visualization, download of historical log files, and more. The software is included in the USB storage delivered with the sensor. If that is not the case, or if the USB stick is no longer available, contact the Rheonics Support Team and provide the sensor serial number (S/N) to request the software.

NOTICE

The SME electronics must be connected to the computer with the USB cable and powered up correctly to establish the first communication with the RCP.

Figure 62: RCP software



Errors and warnings that can appear during the software operation.

Code	Tag	Description	Suggestions
E10, E20, E30	Low Accuracy	Sensor is Locked but measurement may not be stable for accuracy	Make sure sensor is not stable and not touching any surface
E01, E02, E11, E12, E21, E22	Sensor Unlocked	The sensor is not locking properly to a measurement value	Check the sensor position and wiring
E13, E99	Sensor is not connected	The sensor is not connected to the SME	Check sensor wiring

Table 37: Sensor error codes

NOTICE

Find further steps on the RCP Software Manual and on Rheonics articles at *RCP – Rheonics Control Panel – Articles*[47]

15.2 Application and Solution-Specific Software

Beyond the general-purpose sensor interface tools, Rheonics offers application- and solution-specific software packages designed for automated process monitoring and control. These are deployed in dedicated Rheonics hardware systems or bundled with complete turnkey solutions targeting specific industries.

RPS-A — Rheonics Process Monitoring and Control System. The RPS-A is an industrial embedded PC housed in a stainless-steel cabinet with an integrated 10.4 inch touch-screen display. It runs a process control application that acquires viscosity and density from Rheonics inline sensors (SRV, SRD) and optionally integrates third-party pH or level sensors. The system supports monitoring of up to six stations and closed-loop control of up to two stations via electrical and pneumatic outputs for actuating valves, pumps, mixers, and chillers. Industrial communication interfaces include Ethernet, Wi-Fi, and USB.[48]

RPS InkSight — Printing Press Solution. InkSight is a multi-station ink viscosity monitoring and control system for rotogravure and flexographic printing. The ColorLock™ software provides a single-click interface for locking ink viscosity to a master recipe, with Level 5 autonomous control throughout the print run. It supports multiple operator roles (machine operator, production supervisor, quality manager) from a single dashboard and includes an API for integration into press manufacturer HMIs. The system was recognised with the 2021 FTA Technical Innovation Award and the 2021 ERA Sustainable Packaging Innovation Award.[49]

RPS CoaguTrack — Cheese Coagulation Monitoring. CoaguTrack® is an inline cheese coagulation monitoring and control solution for dairy manufacturing. The system continuously measures curd firmness inside the cheese vat and tracks the full kinetics of the coagulation process — including coagulation speed, acceleration, and temperature — in real time. When the target firmness defined by the operator is reached, CoaguTrack automatically generates a cutting signal via a relay output, replacing subjective visual judgment with objective, repeatable determination of the optimal cutting point. Operators configure jobs by selecting parameters such as cheese type, station, and target cutting firmness; saved jobs can be recalled for repeat production runs, eliminating trial-and-error adjustments between batches. All process data are stored for traceability and are exportable for reporting and process optimisation. The software runs on Windows 10 (recommended) and is compatible with both a standard PC setup and the RPS-A embedded controller.[50]

Additional RPS Solutions. The Rheonics Process Solution (RPS) family also includes **RPS PaintTrack** for real-time viscosity control in paint and coating manufacturing, and **RPS SlurryTrack** for slurry density and viscosity monitoring. Each solution combines Rheonics inline sensors with purpose-built software and hardware. Contact Rheonics or visit *rheonics.com/products* for current availability and configuration options.[51]

⚠ NOTICE

The RPS software solutions are sold as integrated systems. For enquiries regarding specific application solutions, contact the Rheonics Sales Team with the application details and target process parameters.

[47] https://rheonics.com/rheonics-control-panel-rcp/
[48] https://rheonics.com/products/rps-a-rheonics-process-monitoring-and-control-system/
[49] https://rheonics.com/products/inksight/
[50] https://rheonics.com/products/coagutrack/
[51] https://rheonics.com/products/

©Rheonics

16 Common Troubleshooting Issues and Solutions

Rheonics sensors are true plug-and-play devices, built for high-reliability industrial environments with no routine maintenance, no moving parts, and lifetime factory calibration. Their high precision and robust design mean that performance is rarely affected by internal failure, but rather by external conditions. Factors such as EMI/RFI noise, mechanical ”wall effects” from tight piping, entrained air or gas, and unstable DC power.

The following table are the most commonly faced issues with the SRV/SRD:

Issue Category	Possible Cause / Symptom Description	Recommended Action and Technical Check
Physical and Process Installation		
Density or viscosity readings affected by contamination or wall effect	Contamination, coating, or proximity to walls distorts measurements.	Clean sensor tip. Verify minimum clearance: 5 mm (SRV) / 12 mm (SRD). Ensure proper immersion away from boundaries. [52]
Noisy or unstable measurement due to entrained air or turbulence	Air bubbles or turbulence cause signal fluctuations.	Ensure full submersion. Minimize turbulence and eliminate air entrainment sources.
Sudden spikes in readings due to air pockets or cavitation	Air pockets or cavitation introduce abrupt disturbances.	Inspect suction conditions and piping. Eliminate air ingress and cavitation sources.
Coating formation leading to measurement drift	Process buildup changes sensing geometry.	Implement periodic cleaning or CIP. Verify cleanliness during maintenance. [53]
Measurement error due to temperature gradients	Non-uniform temperature affects fluid properties and response.	Ensure full immersion and stable thermal conditions. Avoid partial exposure.
Incorrect readings due to wrong installation orientation	Improper orientation affects flow interaction.	Verify installation orientation per guidelines.
Inconsistent measurements due to multiphase flow	Multiphase flow causes fluctuating readings.	Improve mixing or relocate sensor to homogeneous region.
Calibration deviation due to process mismatch	Mismatch with calibration reference causes offsets.	Validate with lab reference and apply offset or recalibration.
Density offset or drift over time due to abrasive environment	Abrasive media causes probe wear affecting readings.	Inspect probe surface. Apply periodic offset correction and compare with baseline.

Table 38: Mechanical and Process Troubleshooting

[52] https://rheonics.com/docid/sup-mech-cleanprobe
[53] https://rheonics.com/docid/sup-sr-instguide

Issue Category	Possible Cause / Symptom Description	Recommended Action and Technical Check
Electrical and Signal Integrity		
Unstable signal due to electromagnetic interference or ground loops	EMI/RFI or improper grounding introduces noise into the signal.	Ground cable shield at PLC side only. Avoid multiple grounding points and route cables away from interference sources. [54]
4–20 mA signal failure due to loop impedance or scaling issues	Excessive loop resistance or incorrect scaling prevents proper signal transmission.	Verify loop impedance and ensure presence of 250 Ω resistor. Check PLC scaling configuration. [55]
Power resets due to voltage drops	Unstable or insufficient power supply causes intermittent resets.	Verify stable 24 VDC supply under load conditions.
Ground loops causing measurement instability	Multiple grounding points create circulating currents affecting signal integrity.	Implement single-point grounding strategy.
Digital Communication and SCADA		
Fieldbus offline due to network configuration mismatch	Incorrect IP address, device name, or network settings prevent communication.	Verify and correct all network configuration parameters. [56][57]
HART communication failure due to missing loop resistance	Insufficient loop resistance prevents proper HART signal modulation.	Ensure presence of 250 Ω resistor in the loop. [58]
Scaling error due to PLC configuration mismatch	Mismatch between sensor output range and PLC interpretation leads to incorrect values.	Align engineering units and scaling parameters.
No data due to incorrect register mapping	Wrong Modbus register addresses or function codes used.	Verify register mapping and communication configuration. [59]
Maintenance and Diagnostics		
Firmware-related malfunction due to corrupted configuration	Firmware or parameter corruption affects device behavior.	Reload firmware and restore calibration data. [60]
Sensor not detected due to cable or connection issue	Broken or disconnected cable prevents detection.	Inspect cable continuity and connections.
Active alarm due to internal sensor fault	Internal diagnostics indicate abnormal condition.	Review diagnostic registers and follow recommended actions.
Startup instability due to insufficient warm-up	Sensor requires stabilization period after power-up.	Allow sufficient warm-up time before relying on measurements.

Table 39: Electrical, Communication and Diagnostics Troubleshooting

For advanced diagnostics, firmware updates, or technical support, access the Rheonics Support Portal[61] for specialized assistance.

[54] https://rheonics.com/docid/sup-ele-emi
[55] https://rheonics.com/docid/sup-ele-420troub
[56] https://rheonics.com/docid/sup-ele-pnettroub
[57] https://rheonics.com/docid/sup-ele-eniptroub
[58] https://rheonics.com/docid/sup-ele-harttroub
[59] https://rheonics.com/docid/sup-ele-mrtutroub
[60] https://rheonics.com/docid/sup-ele-fw
[61] Access the support portal at https://support.rheonics.com or contact support@rheonics.com

17 Index

17.1 Tables Index

Table 1. Signal Words . . . 5
Table 2. Nomenclature and abbreviations . . . 8
Table 3. Rheonics Documentation Reference . . . 9
Table 4. Components of the SRD . . . 13
Table 5. SRD sensor probe general specifications. . . . 14
Table 6. Main codes used in SRD sensor probe variants configuration . . . 20
Table 7. Rheonics Sensor Cable Comparison . . . 25
Table 8. Order code and general specifications . . . 26
Table 9. Operating Environment . . . 30
Table 10. EMC Standards . . . 30
Table 11. SRD Sensor Probe Configuration Options . . . 32
Table 12. Sensor Cable Configuration Options . . . 32
Table 13. SME Sensor Electronics Configuration Options . . . 32
Table 14. Sensor probe specifications. . . . 36
Table 15. Overview of measurements. . . . 37
Table 16. Dynamic viscosity units . . . 38
Table 17. Kinematic viscosity units . . . 38
Table 18. Density units supported by the SRD . . . 39
Table 19. Viscosity temperature compensation models – Exponential Model . . . 40
Table 20. Viscosity temperature compensation models – Polynomial Model . . . 40
Table 21. Viscosity temperature compensation models – Arrhenius Model . . . 40
Table 22. Density temperature compensation models – Linear Model . . . 41
Table 23. Density temperature compensation models – Polynomial Model . . . 41
Table 24. Density temperature compensation models – ASTM Model . . . 41
Table 25. Concentration scales and models . . . 42
Table 26. Indicative chemical compatibility of SRV/SRD wetted materials. Compatibility depends on temperature and concentration. The material compatibility is the responsibility of the operator. . . . 53
Table 27. Disconnecting a wire from the SME . . . 77
Table 28. SME LED configuration . . . 79
Table 29. Process LED status . . . 80
Table 30. HART LED status . . . 80
Table 31. Bluetooth LED status . . . 80
Table 32. Sensor line status . . . 81
Table 33. Process line status . . . 81
Table 34. Components of Rheonics Calibrator . . . 82
Table 35. Components of Rheonics calibration setup . . . 84
Table 36. 4–20 mA output range configuration . . . 88
Table 37. Sensor error codes . . . 92
Table 38. Mechanical and Process Troubleshooting . . . 94
Table 39. Electrical, Communication and Diagnostics Troubleshooting . . . 95
Table 40. A summary of the document revisions. . . . 100

17.2 Figures Index

Figure 1. SRD Sensor Unit . . . 10
Figure 2. Commissioning setup example . . . 11
Figure 3. SRD probe material detail . . . 14
Figure 4. Shear Rate vs Viscosity for Type-SR sensor . . . 18
Figure 5. SRD probe base variants without process connection - Units: mm [in] . . . 20
Figure 6. SRD main probe variants - Units: mm [in] . . . 21
Figure 7. SRD main customizable probe variants - Units: mm [in] . . . 22
Figure 8. Rheonics SRD rear-mounted thread variant with Teletube extension - Units: mm [in] . . . 22

Figure 9. SRD-X9 specialized probe variants - Units: mm [in] . . . 23
Figure 10. Rheonics SRD Variant X3-B15T with TT option - Units: mm [in] . . . 24
Figure 11. Rheonics SRD Fixed Transmitter . . . 24
Figure 12. Rheonics SME-TR(Left) and Rheonics SME-TRD(Right) . . . 27
Figure 13. Rheonics SME-DRM . . . 28
Figure 14. Rheonics SME-BOX(a) and Rheonics SME-BOX back view(b) . . . 29
Figure 15. Operating principle: Viscous damping and mass loading . . . 33
Figure 16. SRD probe main parts. Variant SRD-X1-34N used as reference. . . . 35
Figure 17. Type-SR sensor probe markings. . . . 36
Figure 18. Density temperature compensation example for water. . . . 43
Figure 19. Density temperature compensation model configuration in RCP . . . 44
Figure 20. SRD sensing area . . . 45
Figure 21. SRD Long insertion probe for thermal balance. . . . 46
Figure 22. SRD Perpendicular and parallel installation orientations. . . . 47
Figure 23. Installation according to EHEDG . . . 49
Figure 24. Installation according to EHEDG . . . 50
Figure 25. Example of installation in HAW-12G-OTK . . . 51
Figure 26. Schematic of probe protrusion requirement in a high-temperature installation. The protrusion length L-A must be sufficient to bring the M12 connector to ambient temperature. . . . 52
Figure 27. Operating limits for the SRD sensing element under perpendicular installation. (a) Maximum permitted fluid velocity as a function of fluid density. (b) Maximum permitted dynamic viscosity as a function of fluid velocity. Operating above either curve risks permanent damage to the sensing element. . . . 56
Figure 28. SRV-X9 Stargate installation orientations. Left: sensing element facing the flow for optimal measurement. Right: base facing the flow for maximum force protection in ultra-high-viscosity or particle-laden applications. . . . 57
Figure 29. Rheonics SRD perpendicular installation. Red: Stagnation zones. Green: Good flow for measurement . . . 59
Figure 30. Weldolet accessories for SRD . . . 60
Figure 31. Weldolet drawings - Units: mm [in] . . . 60
Figure 32. Sensor probe installation in flow cell. Red: Stagnation zones. Green: Good flow for measurement. . . . 62
Figure 33. Flow cell accessories for SRD . . . 63
Figure 34. Flow cell drawings - Units: mm [in] . . . 63
Figure 35. Thermal Control Module accessories . . . 66
Figure 36. Table Top accessories . . . 67
Figure 37. Table top accessory setup - Units: mm [in] . . . 67
Figure 38. Mounting MKT accessories . . . 68
Figure 39. Protective cage accessories . . . 68
Figure 40. Protective cage accessories . . . 69
Figure 41. Retractable Probe Assembly . . . 70
Figure 42. Electronics accessory examples . . . 70
Figure 43. SME Markings . . . 71
Figure 44. Internal label in SME-TRD that indicates sensor information . . . 72
Figure 45. SME-TR(D) MetalSheet in SME-TRD that indicates sensor information . . . 72
Figure 46. Rheonics sensor wiring - Variant A . . . 73
Figure 47. Rheonics sensor wiring - Variant B . . . 73
Figure 48. SME-TR(D) grounding tabs . . . 74
Figure 49. Wiring examples A-D. 1: Power (24VDC) 2: Sensor cable . . . 75
Figure 50. Sensor cable with crimped wires . . . 76
Figure 51. Disconnecting a wire from the SME . . . 76
Figure 52. Power terminals in SME . . . 78
Figure 53. SME-DRM LED states E3 . . . 79
Figure 54. SME-TRD(1) and SME-TR(2) Electronics LED states . . . 79
Figure 55. Rheonics SME-TRD - Display LEDs . . . 79
Figure 56. SME-TRD display parameters and sensor information . . . 81
Figure 57. Type-SR calibration in Rheonics Calibration . . . 82

Figure 58. SRD calibration setup example 84
Figure 59. 4-20mA outputs available in the SME Wiring option A 86
Figure 60. 4-20mA outputs available in the SME Wiring option B 87
Figure 61. 4-wire SME, a block diagram of the Rheonics SME 87
Figure 62. RCP software 92

18 Notes/Errata

19 Revision and Approvals

Version	Nature of Changes	Approvals	Date
1.0	Original version of the document.	SK	2026-02-09
2.0	Minor edits in the existing sections.	DB	2026-02-09

Table 40: A summary of the document revisions.

For more information: https://support.rheonics.com
Rheonics is a trademark of Rheonics GmbH. Other product and company names listed in this manual are trademarks or trade names of their respective manufacturers.

https://rheonics.com/

rheonics

© RHEONICS 2026
No part of this publication may be copied or distributed, transmitted, transcribed, stored in a retrieval system, or translated into any human or computer language, in any form or by any means, electronic, mechanical, manual, or otherwise, or disclosed to third parties without the express written permission of Rheonics. The information contained in this manual is subject to change without notice.